ITEM NO.	PART NUMBER	DESCRIPTION	QTY.
1	050-2199	LABEL, SECONDARY S/N, CARDIO	1
2	110-0575	BOLT, 1/4-20 x 1.25, HHC,HE,CS,ZP	4
3	110-1871	NUT, NYLON INSERT	4
4	110-3076	SCREW, 5/16-18 X 1.25, HHTS	4
5	22032	NUT,.312-18,NYLON INSERT, HEX	4
6	22165	SCREW,.312-18X1.00,HEX HD CAP	2
7	110-3480	NUT, 3/8-16, SHN, CS, ZP, GR 5	4
8	40443	SCREW, #10-32 X 1.0, OH, S.S.	6
9	13191	SCREW, 1/4-20 X 2.50, PAN HEAD, W/LOCK WASHER	4
10	40670	SCREW, #1/4-20 X .75, PAN HEAD, W/LOCK WASHER	2
11	120-0410	WASHER, 1/4, SAE FLAT	4
12	120-0420	WASHER, 1/4, SPLIT LOCK	4
13	120-0480	WASHER, 5/16 ID, 7/8 OD, .087 THK	4
14	120-0495	WASHER, 5/16, SPLIT LOCK	4
15	17686	LEVELING PAD (.500-13UNC-2A X 2.25 BASE)	2
16	055-0251	MANUAL, OWNERS, FREECLIMBER	1
17	055-0252	ASSEMBLY, FREECLIMBER	1
18	055-0041-35	COVER, LEFT ASSY W/DECALS	1
19	055-0040-35	COVER, RIGHT ASSY W/DECALS	1
20	055-0032-26	ASSY, HANDRAIL WITH FOAM PC	2
21	711-3397-26	CAP, LEVELING SUPPORT	2
22	055-0254	KIT, HARDWARE, E-ST	1
23	055-0030-26	ASSEMBLY, CHR HANDLE, OVERMOLD	1
24	22075	WASHER,.375X.875X.078,STEEL,ZINC	4

ITEM NO.	PART NUMBER	DESCRIPTION	QTY.
25	24162	BUTTON HEAD CAP SCREW 0.250"-20 x 0.375	2
26	055-0033-26	WELDMENT, CONSOLE MAST	1
27	002-0368	SCREW, 5/16-15X2" HEX HEAD, GR5 BLACK	2
28	22074_13000	EDGE TRIM, RUBBER, 3/8 X 5/16	1
29	740-8521-35	COVER, TOP, E-ST	1
30	055-0300-26	BASE FRAME, GAUNTLET	1
31	055-0098	POWER PIGTAIL, TOGGLE SWITCH TO CONTROL BOARD	2
32	055-0097	TOGGLE SWITCH TO CONSOLE, POWER PIGTAIL	1
33	PO10070018E	COVER, LOWER PLUG RECEPTACLE	1
34	055-0011	ASSY, SC5 POWER TO TOGGLE SWITCH, PIGTAIL	1
35	13190	SCREW #6-32x0.5, FLAT HEAD	4
36	055-0015	CARLING P/N 622222-BB-NE	1
37	40654	SCREW, #10-32 X .75, PAN HEAD, W/LOCK WASHER	2
38	13204	HARNESS, T-BAR GRIP TO CONSOLE, RoHS	1
39	055-0010	ASSY, CABLE SC5 BOARD/CONSOLE	1
40	050-0236	POWER KIT, SM5/SC5	1
41	240-6905	COUPLER,"F-TYPE", F/F,W/ NUT & WASHER	1
42	055-0082-35	CARGO TRAY UPPER, ASSY	1
43	055-0085-35	CARGO TRAY LOWER	1
44	17578	WASHER, LOCK, INT. STAR, #10, SS	2
45	17815	SCREW, #10-32 X .50, PAN HEAD, S.S., HEX DRIVE, BLACK OXIDE	2
46	13207	END CAP, ROUND,3"	1
47	055-0250	PACKAGE, FREECLIMBER	1

REVISION HISTORY

REV	DATE	DESCRIPTION	ECO	BY
A	12/23/2013	PRODUCTION RELEASE	14489	ATV

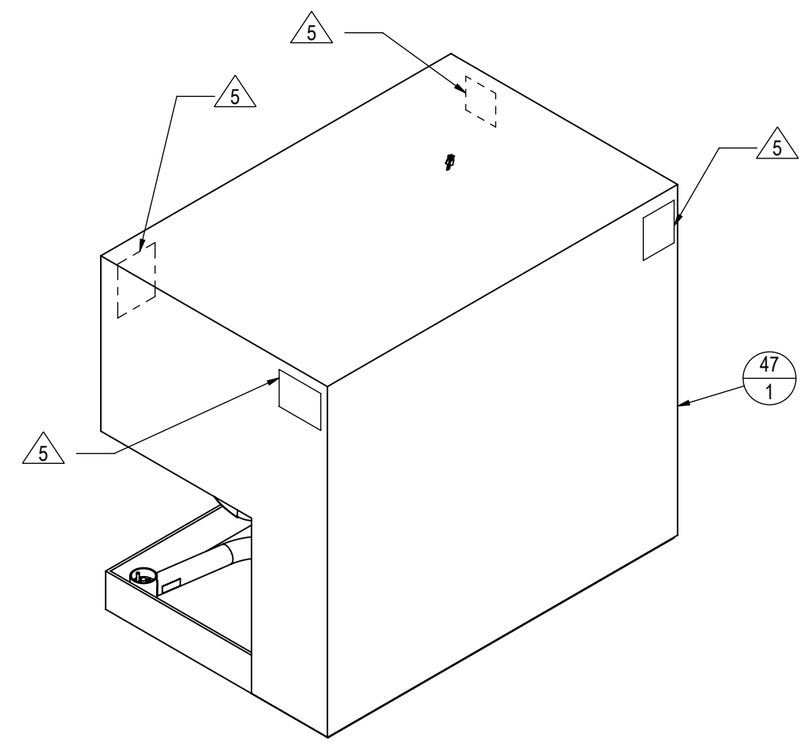

NOTES:
1. -XX COLOR DESIGNATOR PER SOP 620-8222, UNLESS OTHERWISE NOTED.
2. BOX SIZE
   A. L = 45 15/16in (1168.4mm)
   B. W = 29 9/16in (736.6mm)
   C. H = 39 15/16in (1143mm)
3. BOX UNIT GROSS WEIGHT: 178lbs (81kg)
4. FREECLIMBER NET WEIGHT: 150lbs (68kg)
5. LABEL INFORMATION (4 PLACES)
   A. MODEL: FreeClimber
   B. SKU: 155015
   C. SERIAL NUMBER: SKU-DAY-YYWWXXXX
   D. DESIGNED IN THE USA
   E. ASSEMBLED IN CHINA
6. CLEAN AREA WITH DENATURED ALCOHOL BEFORE APPLYING

DOCUMENT STATUS:
ECO

NOTICE OF PROPRIETARY INFORMATION

THIS DOCUMENT SHALL NOT BE REPRODUCED NOR SHALL THE INFORMATION CONTAINED HEREIN BE USED BY OR DISCLOSED TO OTHER EXCEPT AS EXPRESSLY AUTHORIZED BY CORE HEALTH & FITNESS, LLC.

MATERIAL
SEE BOM

FINISH
SEE BOM

VENDOR: P/N:

THIRD ANGLE PROJECTION

	INITIAL	DATE
DRAWN	ATV	12/23/2013
CHECKED		
APPROVED		
	U.O.M.	MM

CORE HEALTH & FITNESS, LLC
4400 NE 77th Ave., Suite 300
Vancouver, WA 98662

CORE PART NO: 155015
REV: A

TITLE: FREECLIMBER, INIV BASE

SCALE: 1:14 | SHEET 1 OF 3 | SHEET SIZE: B

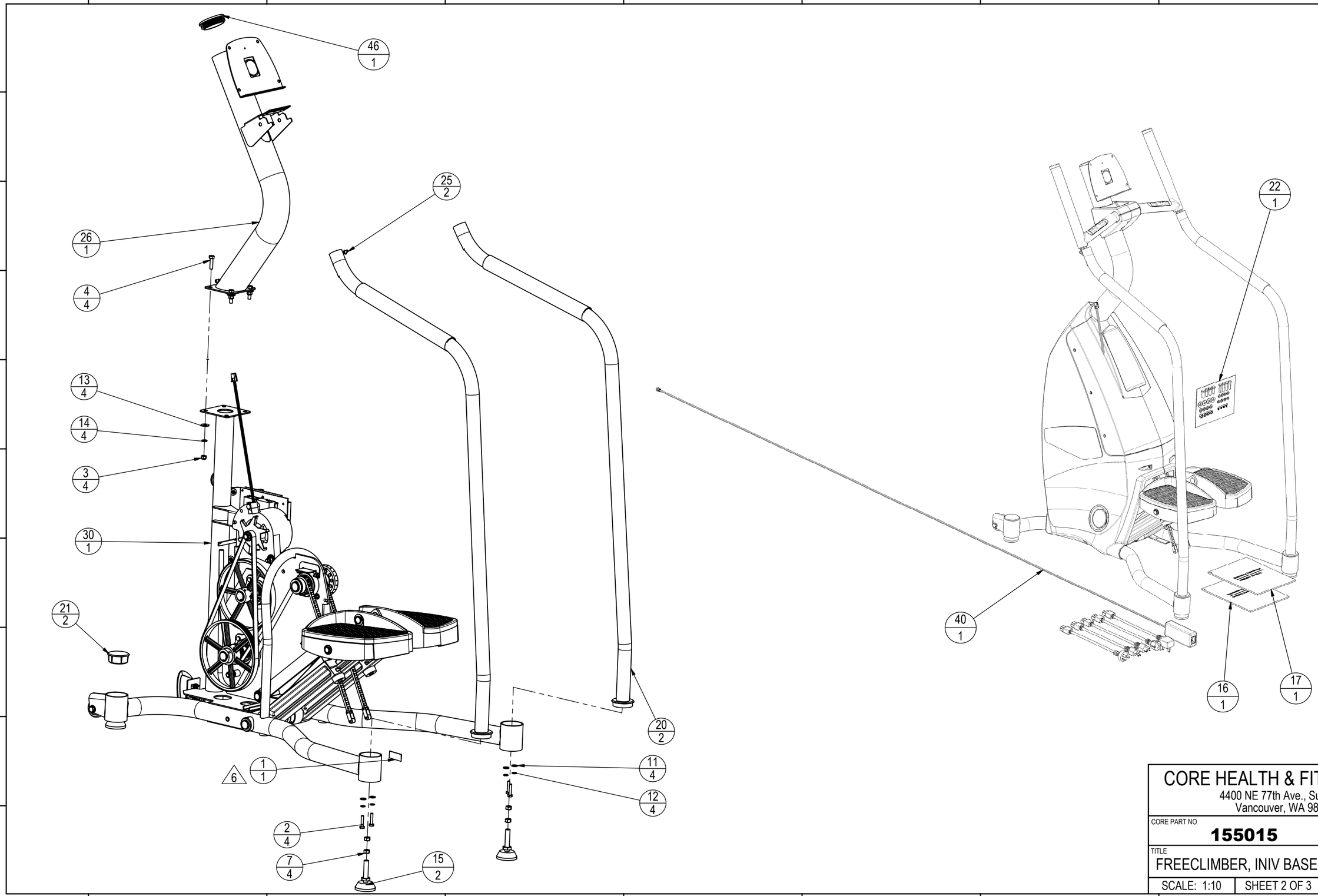

CORE HEALTH & FITNESS, LLC
4400 NE 77th Ave., Suite 300
Vancouver, WA 98662

CORE PART NO	REV
155015	**A**

TITLE
FREECLIMBER, INIV BASE

SCALE: 1:10	SHEET 2 OF 3	SHEET SIZE: B

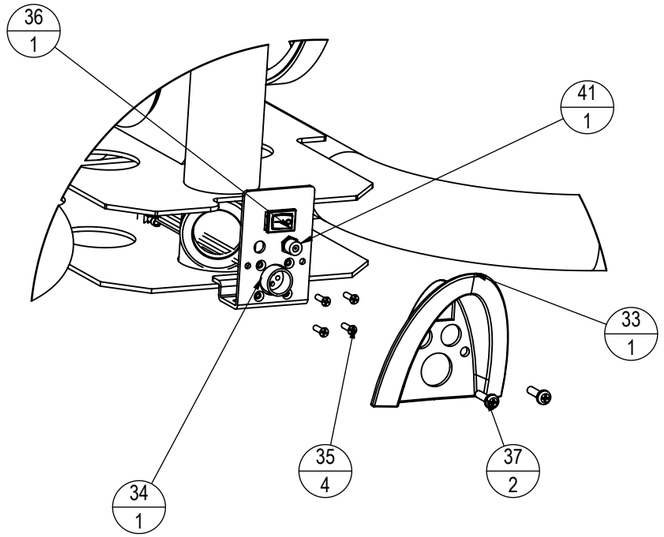

DETAIL E
SCALE 1 : 4

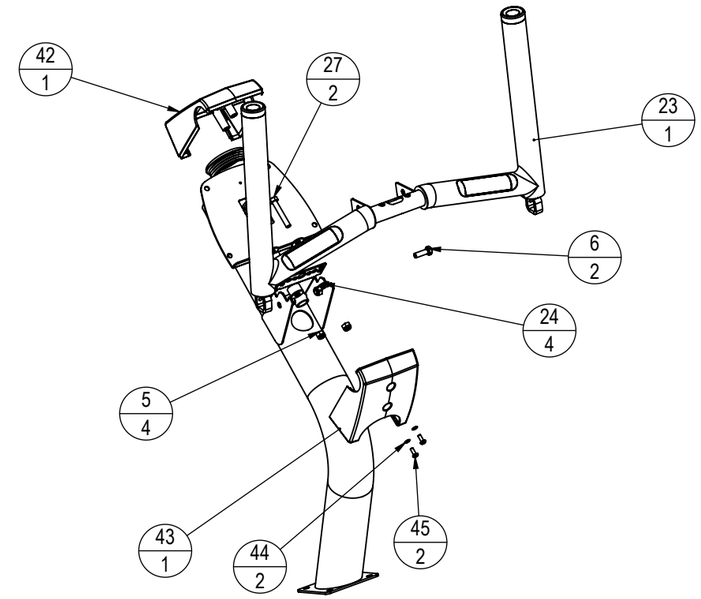

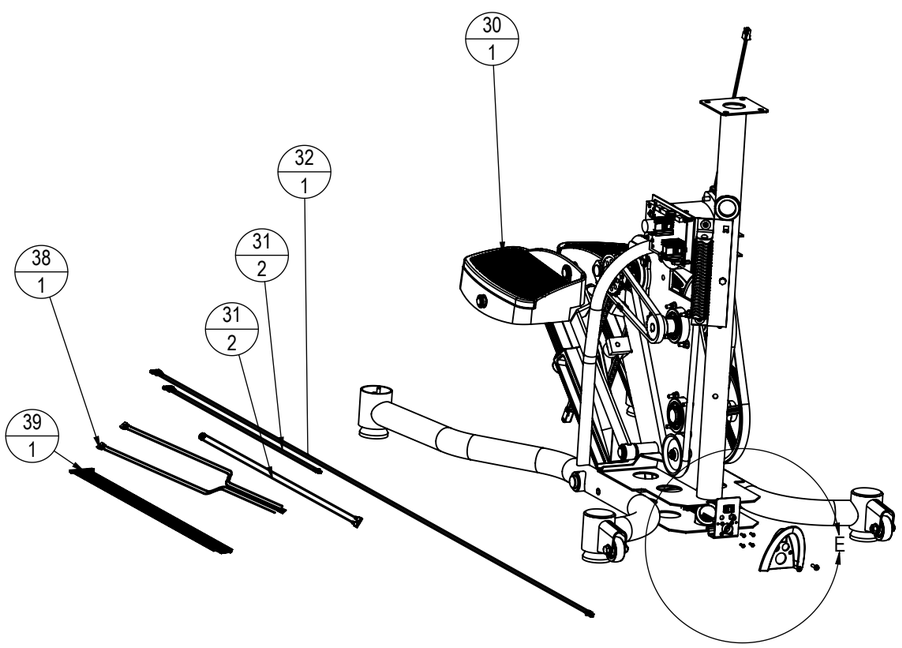

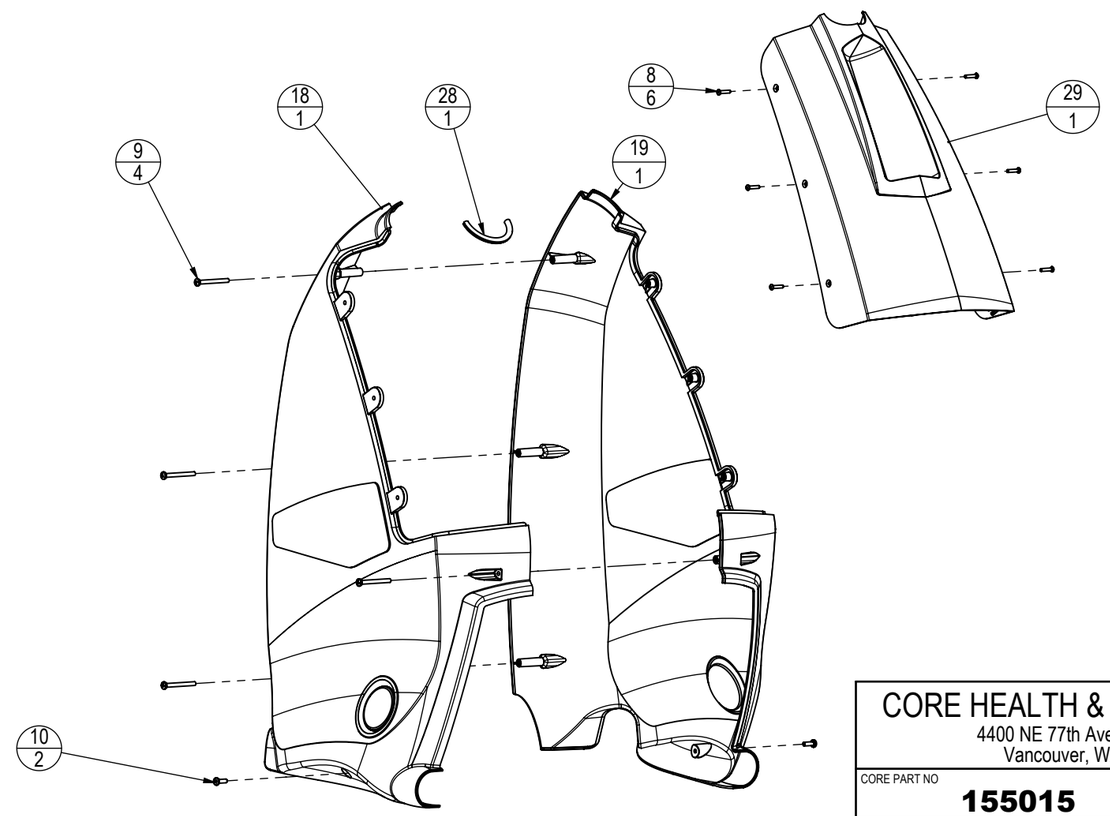

CORE HEALTH & FITNESS, LLC
4400 NE 77th Ave., Suite 300
Vancouver, WA 98662

CORE PART NO	REV
155015	A

TITLE
FREECLIMBER, INIV BASE

SCALE: 1:10	SHEET 3 OF 3	SHEET SIZE: B

ITEM NO.	PART NUMBER	DESCRIPTION	QTY.
1	130-1809	CHAIN, STEP, w/ MASTER LINK, E-ST	2
2	140-3537	PEM INSERT, 1/4-20	3
3	711-3401-26	ASSY, PEDAL ROD, E-ST	2
4	711-3410	SPRING, PEDAL RETURN, E-ST	2
5	711-3416-26	ASSY, PEDAL ARM W/PEDAL, E-ST 5090, LH	1
6	711-3417-26	ASSY, PEDAL ARM W/PEDAL, E-ST 5090, RH	1
7	055-0016-26	WELDMENT, MAINT FRAME, SM FREECLIMBER	1
8	13082	ASSEMBLY, CONTROL BOARD	1
9	21519	PULLEY, SPRING	2
10	22347	CHAIN, TRANSMISSION, E-ST	1
11	13009	ASSY, ALTERNATOR	1
12	13071	ASSY, SECOND REDUCTION PULLEY	1
13	13152	BELT, FLEX, POLY-V, 6 G, 7.15 C TO C	1
14	13066	ASSEMBLY, FIRST REDUCTION PULLEY	1
15	22139	SCREW, .250 X .50, SELF THREAD, HWH, F	1
16	56-0298	Grommet Rubber 1.625	2
17	20188	MOUNT, SHOCK	2
18	22205	NUT, JAM HEX, 1/2-13	4
19	17686	LEVELING PAD (.500-13UNC-2A X 2.25 BASE)	2
20	24643	NUT,.375-16,NYLON INSERT, HEX, THIN	2
21	24640	SCREW,.375-16X1.75 HEX HD CAP	2
22	27585	WASHER,.406X1.25X.047,STEEL,ZINC	6
23	002-0439	WHEEL, RUBBER, 2" (1G003110394)	2
24	02-4132	Alloy Steel	1
25	07-6065	1 1/4" REAMED LOCK COLLAR	1
26	20213	RING, SNAP 3/4"	4
27	21871	WASHER, 3/4", NARROW, FLAT	2
28	22878	SCREW, SET,0.25-28x0.375	2
29	13053	SPACER, PEDAL SHAFT	1
30	13052	SHAFT, PEDAL ARMS, SC916	1
31	21462	WASHER,0.390X.630X.060,STAINLESS STEEL	2
32	22143	RING, SNAP 3/8"	2
33	22164	SCREW, .250 - 20 x 1.25, HEX HD CAP	12
34	22036	NUT,.250-20,NYLON INSERT, HEX	12
35	13075	BRACKET, PEDAL CHAIN RETAINER	2
36	22047	WASHER,.281X.625X.063,STEEL,ZINC	10
37	13054	ASSEMBLY, DRIVE HUB, SC916	1
38	22029	NUT,.375-16,NYLON INSERT, HEX	1
39	22097	SCREW, .375-16X2.75 HEX HD CAP	1
40	22191	WASHER, SHOULDER, .38 I.D.	2
41	13048	BELT, FLEX, POLY-V, 6 G, 14.29 C TO C	1
42	22075	WASHER,.375X.875X.078,STEEL,ZINC	1
43	22070	WASHER,SPLIT LOCK,.312	1
44	22165	SCREW,.312-18X1.00,HEX HD CAP	1
45	13170	SPACER, ALTERNATER, SC916	1

REVISION HISTORY

REV	DATE	DESCRIPTION	ECO	BY
A	9/9/2013	ORIGINATED	14489	ATV

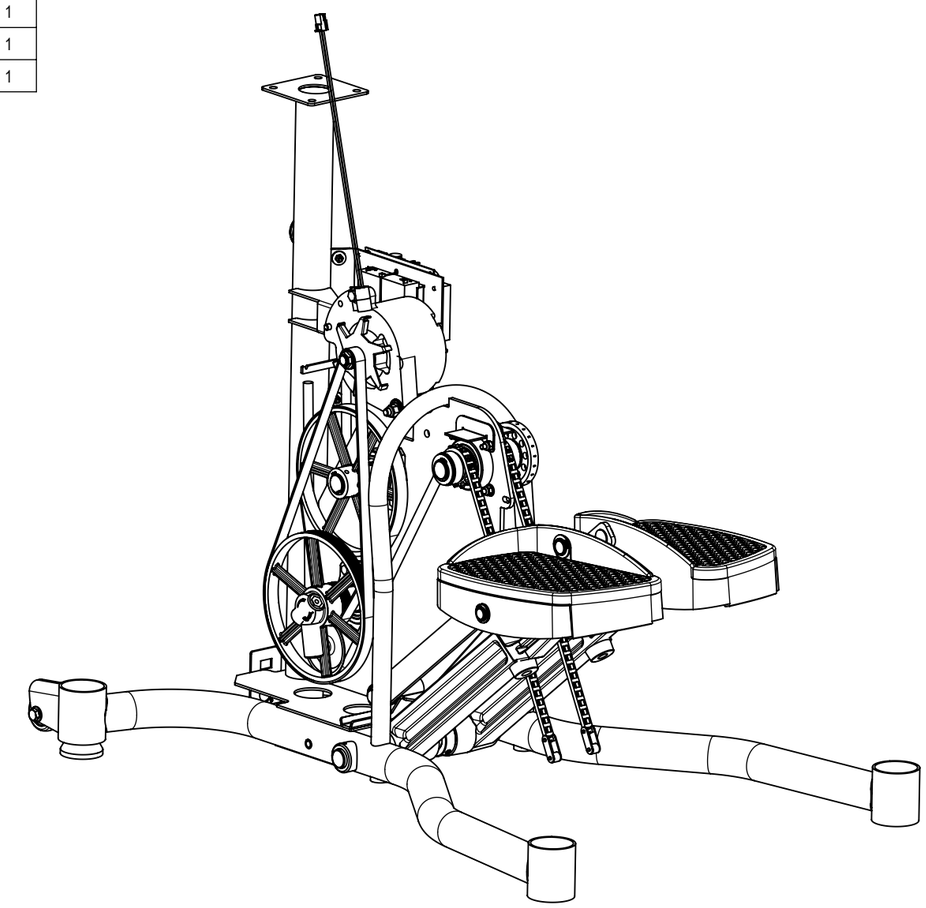

NOTES:
1. COLOR DESIGNATOR PER -XX AS SPECIFIED IN SOP 620-8222

DOCUMENT STATUS:
DEVELOPMENT

NOTICE OF PROPRIETARY INFORMATION

THIS DOCUMENT SHALL NOT BE REPRODUCED NOR SHALL THE INFORMATION CONTAINED HEREIN BE USED BY OR DISCLOSED TO OTHER EXCEPT AS EXPRESSLY AUTHORIZED BY CORE HEALTH & FITNESS, LLC.

MATERIAL
SEE BOM

FINISH
N/A

VENDOR: P/N:

THIRD ANGLE PROJECTION

	INITIAL	DATE
DRAWN	ATV	9/9/13
CHECKED		
APPROVED		
	U.O.M.	MM

CORE HEALTH & FITNESS, LLC
4400 NE 77th Ave., Suite 300
Vancouver, WA 98662

CORE PART NO: 055-0300-XX
REV: A

TITLE: BASE FRAME, FREECLIMBER

SCALE: 1:8 | SHEET 1 OF 3 | SHEET SIZE: B

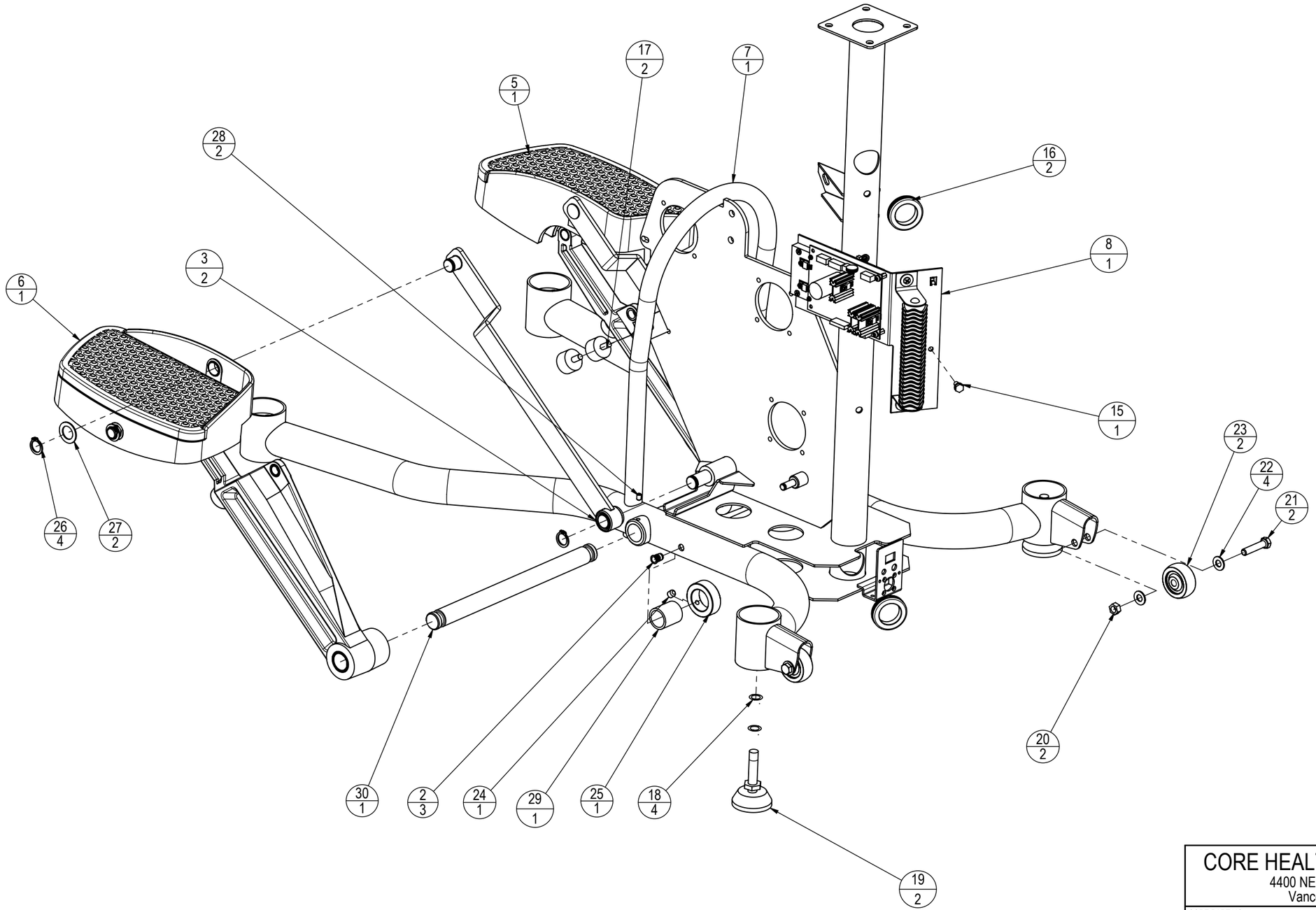

CORE HEALTH & FITNESS, LLC
4400 NE 77th Ave., Suite 300
Vancouver, WA 98662

CORE PART NO	REV
055-0300-XX	**A**

TITLE
BASE FRAME, FREECLIMBER

SCALE: 1:6	SHEET 2 OF 3	SHEET SIZE: B

NOTES:
2. TORQUE TO 14.75 ft-lbs (20 N-m)

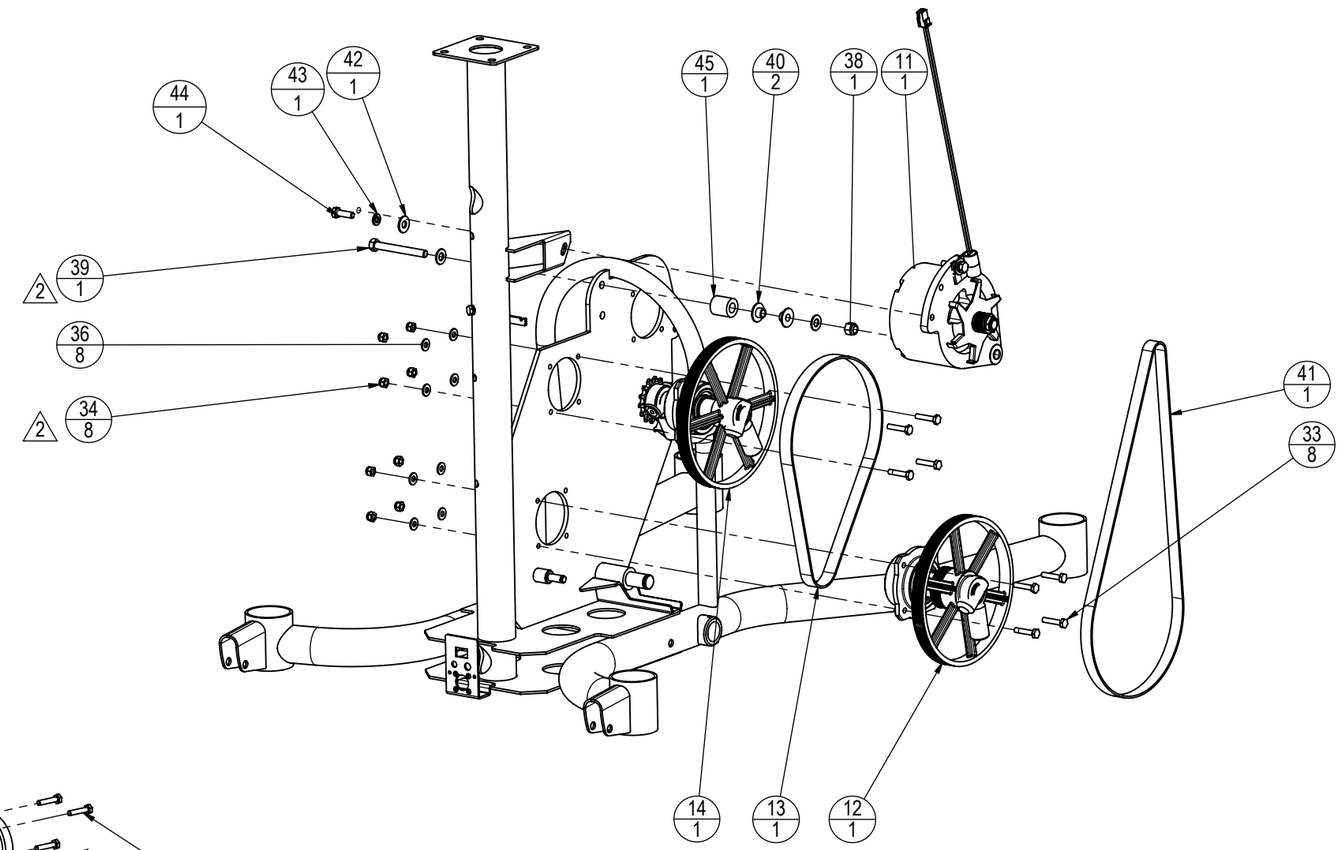

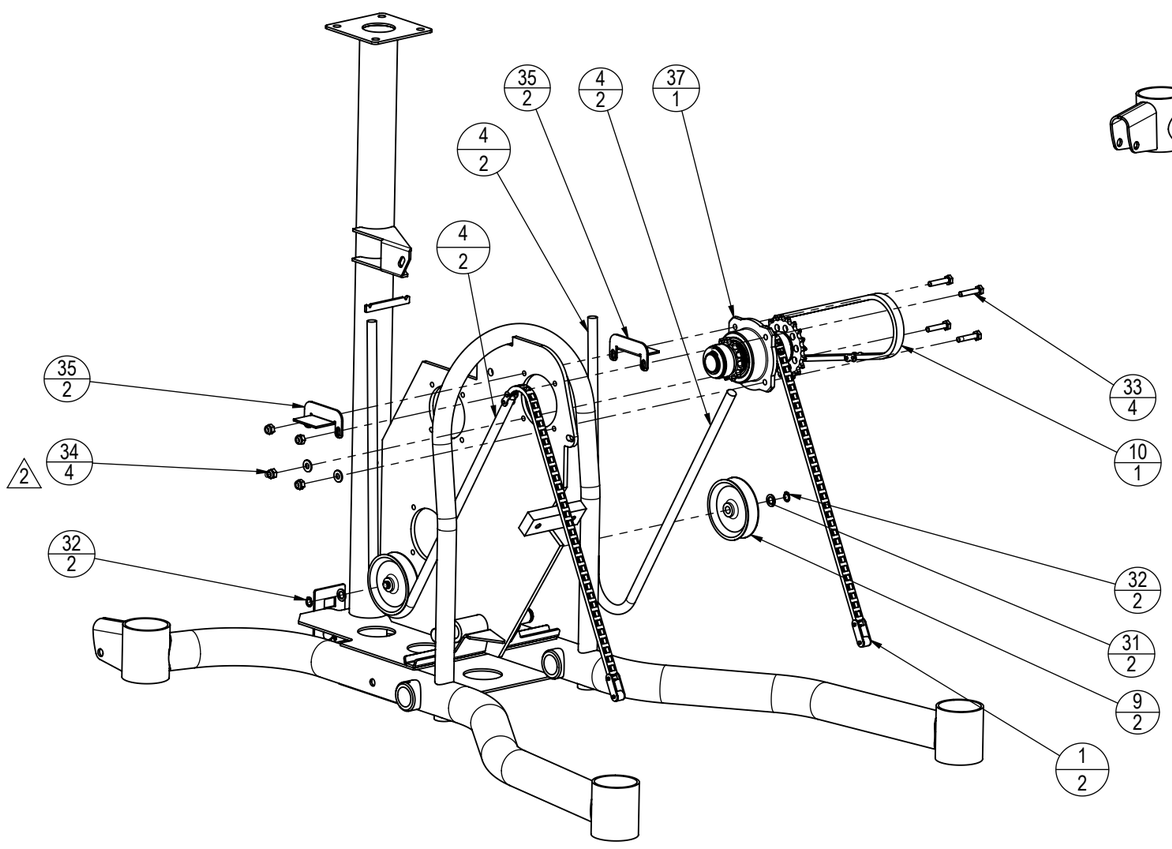

CORE HEALTH & FITNESS, LLC 4400 NE 77th Ave., Suite 300 Vancouver, WA 98662	
CORE PART NO **055-0300-XX**	REV **A**
TITLE BASE FRAME, FREECLIMBER	
SCALE: 1:8	SHEET 3 OF 3 | SHEET SIZE: B