# SCIFIT PRO1

PRO101-INT

## Parts Manual

10/20/2020 6:22:06 AM

LifeFitness
WHAT WE LIVE FOR

## Table of Contents

Base Assembly PRO1 Sport....3
Bearing Mount Bi Directional Assembly....4
Bearing Mount Jack Shaft Assembly....5
Bracket Support Console....6
Brake Assembly PRO1....7
Cable Pull Assembly PRO1....8
Chain 40 Long Assembly PRO1....9
Chain 40 Short Assembly PRO1....10
Covers Assembly Charcoal PRO1....11
Crank Adjustable Left Assembly PRO1....12
Crank Adjustable Right Assembly PRO1....13
Gas Shock Assembly PRO1....14
Handle Crank Standard Gray Assembly PRO....15
Idler Assembly PRO1....16
Spindle Bearing Drive Assembly....17
Spindle Sprocket Assembly PRO1....18
Sprocket 40 Bi Directional Assembly PRO1....19
Sprocket 40 Jackshaft Pulley Assembly PRO1....20
Wiring PRO101-INT Post 5-2013....21
Wiring PRO101-INT Pre 5-2013....22

# Base Assembly PRO1 Sport

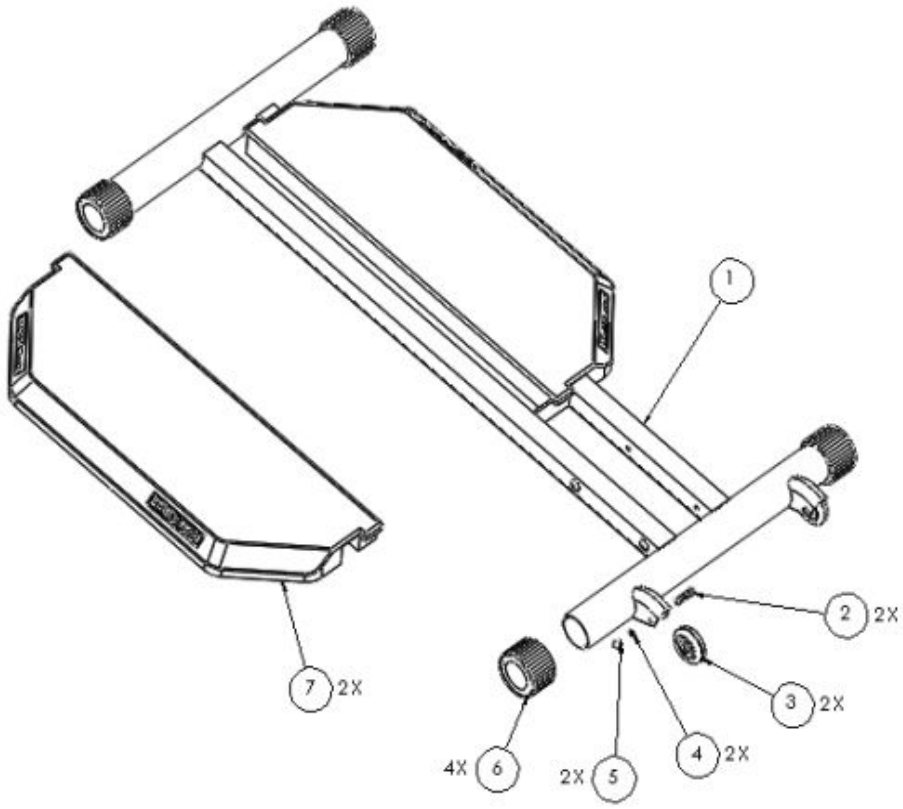


| Ref # | Part Number | Qty | Description |
|---|---|---|---|
| 1 | A2740-CH | 1 | Frame Base PRO1 Sport Charcoal |
| 2 | 73783 | 2 | 5/16"-18 x 1-3/4" Stnlss BSCS |
| 3 | P2144 | 2 | Wheel Front PRO II |
| 4 | 33892 | 2 | 5/16" Yellow Zinc Split L/W |
| 5 | 70961 | 2 | 5/16"-18 Stnlss Stl Acorn Nut |
| 6 | A1890 | 4 | Cap Base 3" Adj. 65 Durometer |
| 7 | S4982 | 2 | Kit,Platform for R or L side w |

# Bearing Mount Bi Directional Assembly

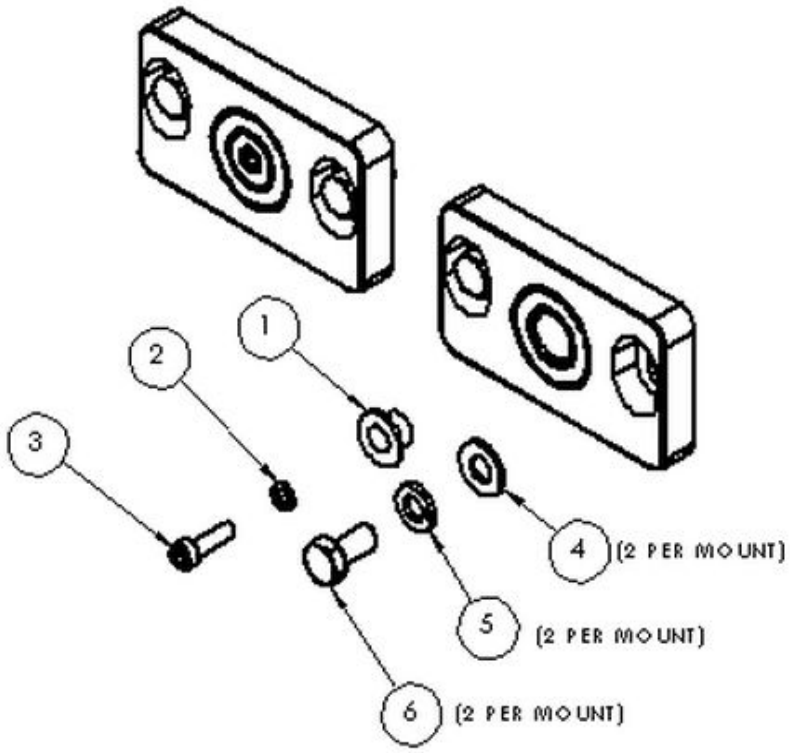


| Ref # | Part Number | Qty | Description |
|---|---|---|---|
| 1 | A1972 | 2 | Washer Retain. Bearing Recess |
| 2 | 33614 | 2 | #10 Zinc Split L/W |
| 3 | 93165 | 2 | #10-32 x 5/8" Zinc SCS |
| 4 | 33080 | 4 | 5/16" Zinc F/W |
| 5 | 33892 | 4 | 5/16" Yellow Zinc Split L/W |
| 6 | 13052 | 4 | 5/16"-18 x 5/8" Zinc HCS |
| - | S4748 | 1 | Kit (1pr.) Bearing Mount Bi- |

# Bearing Mount Jack Shaft Assembly

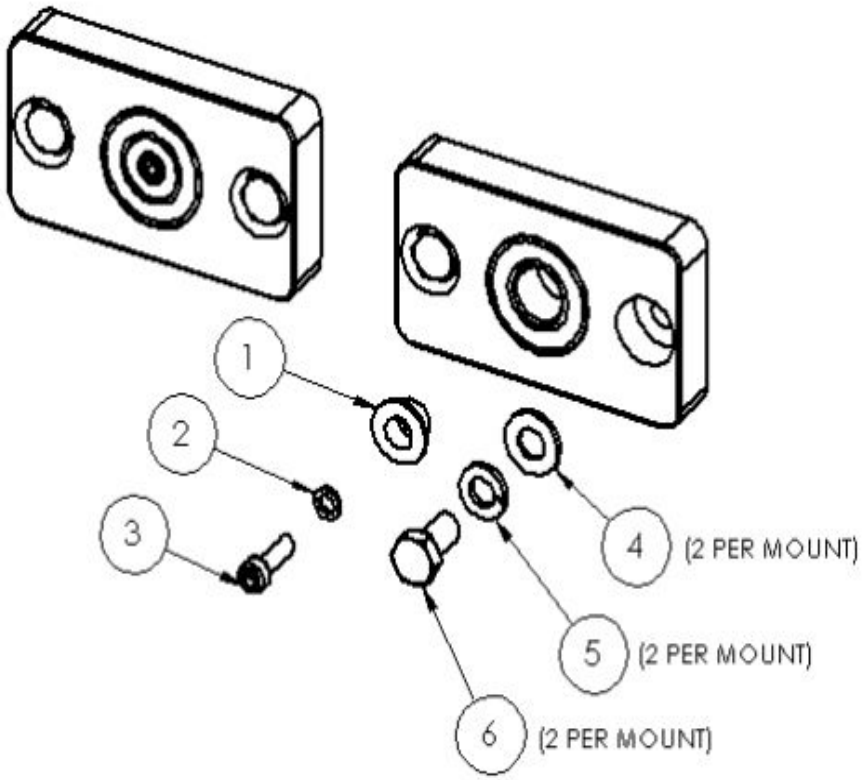


| Ref # | Part Number | Qty | Description |
|---|---|---|---|
| 1 | A1972 | 2 | Washer Retain. Bearing Recess |
| 2 | 33614 | 2 | #10 Zinc Split L/W |
| 3 | 93165 | 2 | #10-32 x 5/8" Zinc SCS |
| 4 | 33080 | 4 | 5/16" Zinc F/W |
| 5 | 33892 | 4 | 5/16" Yellow Zinc Split L/W |
| 6 | 13052 | 4 | 5/16"-18 x 5/8" Zinc HCS |
| - | S4747 | 1 | Kit (1 pr) Bearing Mount Jac |

# Bracket Support Console

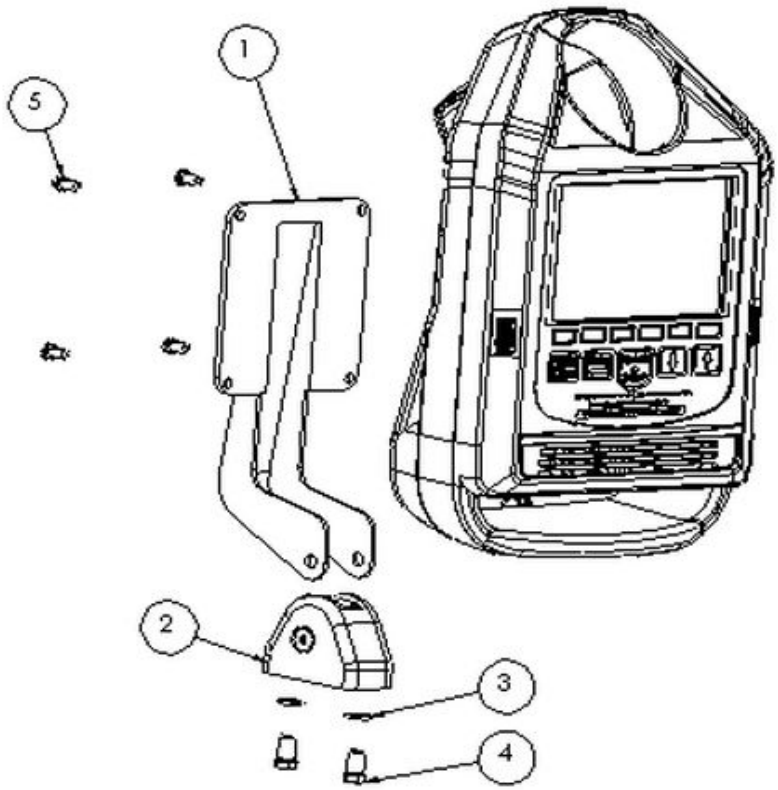


| Ref # | Part Number | Qty | Description |
|---|---|---|---|
| 1 | A4659 | 1 | DISPLAY ADJ PRO LCD V2 |
| 2 | S5791 | 1 | Kit Quadrant W/HW Post 4/13 PR |
| 3 | 33892 | 2 | 5/16" Yellow Zinc Split L/W |
| 4 | 13052 | 2 | 5/16"-18 x 5/8" Zinc HCS |
| 5 | 10537-09060 | 4 | Screw M5 x 12mm Phil Black Zinc |

# Brake Assembly PRO1

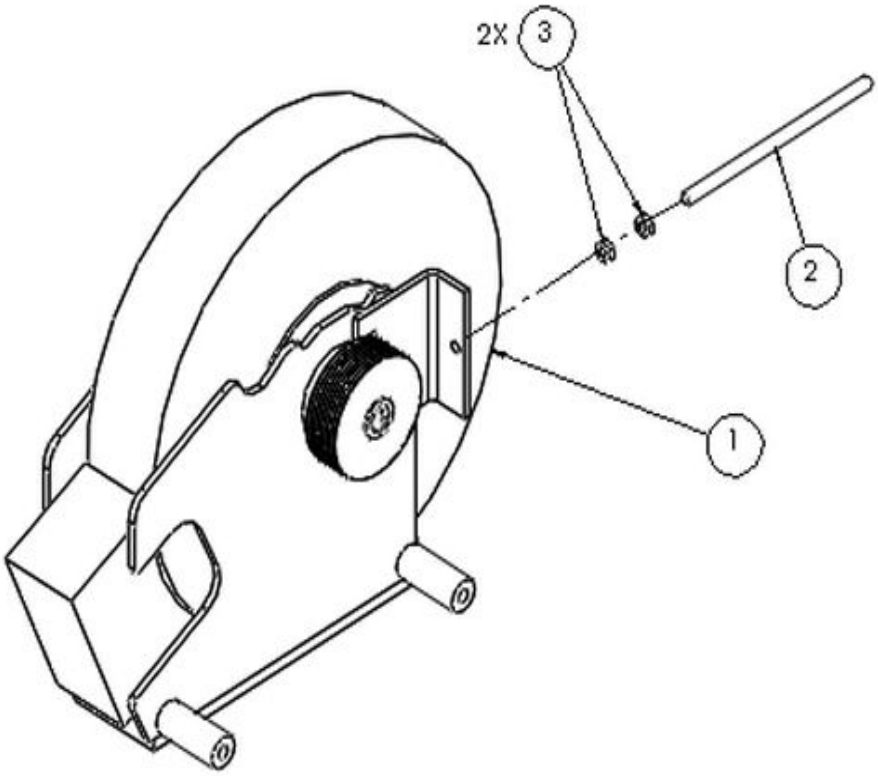


| Ref # | Part Number | Qty | Description |
|---|---|---|---|
| 1 | S1906 | 1 | Kit Brake w/60mm Pulley Bikes |
| 2 | P2520 | 1 | Rod Tensioning 5" #10-32 UNF THD |
| 3 | 36030 | 2 | 10-32 Zinc Machine Screw Nut |

# Cable Pull Assembly PRO1

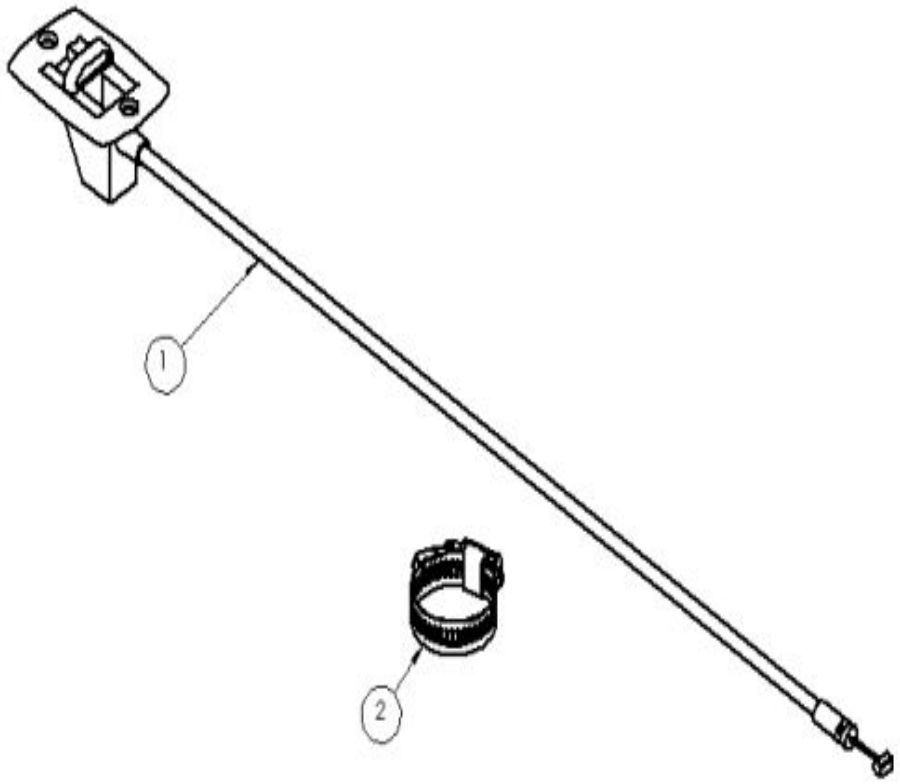


| Ref # | Part Number | Qty | Description |
|---|---|---|---|
| 1 | P2039 | 1 | Actuator Pull Cable Assy. |
| 2 | 0427612 | 1 | KIT:CLAMP, HOSE, 20 3/4" X 1 3/4 WIDE |
| - | S4464 | 1 | KIT ACTUATOR PULL CBL/HOSE CLA |

# Chain 40 Long Assembly PRO1

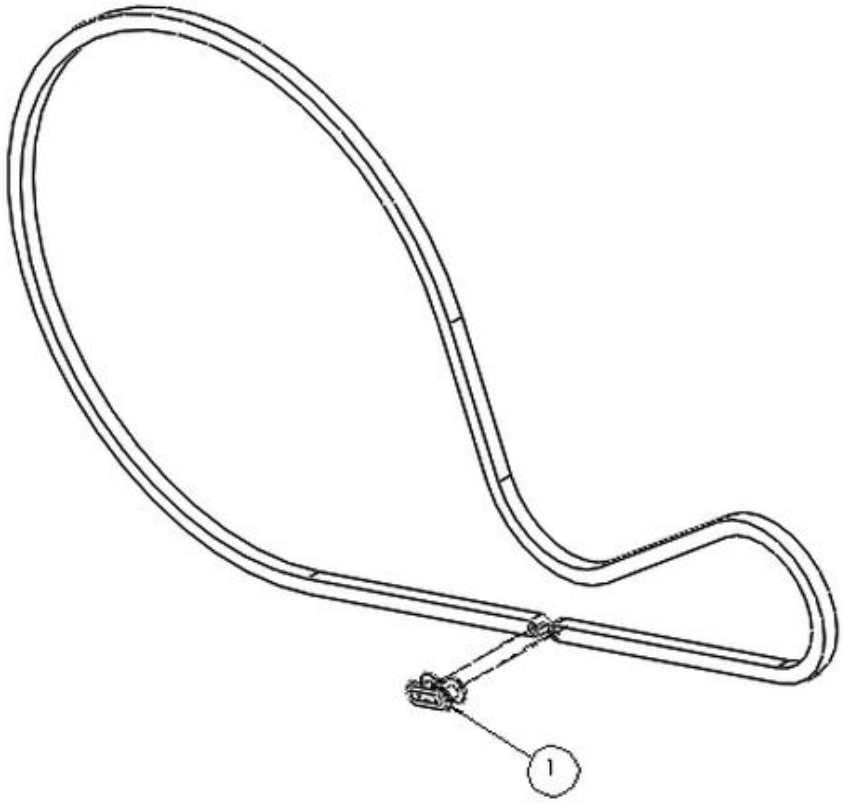


| Ref # | Part Number | Qty | Description |
|---|---|---|---|
| 1 | P2379 | 1 | Link master chain #40 |
| - | A3119 | 1 | Kit Chain Long #40 86P ISO7000 |

# Chain 40 Short Assembly PRO1

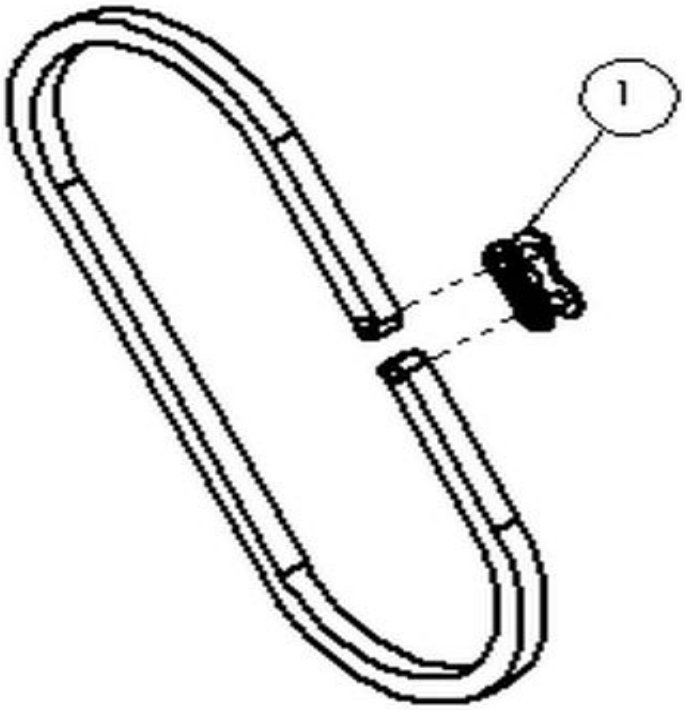


| Ref # | Part Number | Qty | Description |
|---|---|---|---|
| 1 | P2379 | 1 | Link master chain #40 |
| - | A3120 | 1 | Kit #40 Chain Short 32P ISO RE |

# Covers Assembly Charcoal PRO1

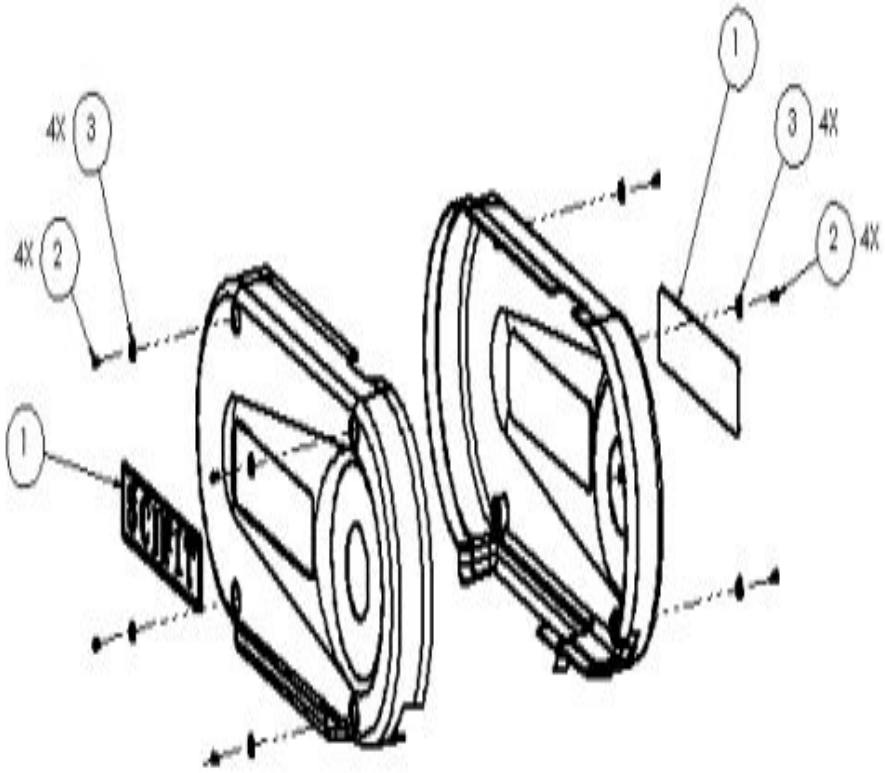


| Ref # | Part Number | Qty | Description |
|---|---|---|---|
| 1 | P1100 | 2 | DECAL SCIFIT 2.75 X 12 |
| 2 | 11253079 | 8 | #10-32 x .375 Phillips Pan Machine Screw Black |
| 3 | P1921 | 8 | Washer cover plastic |
| - | S5786 | 1 | Kit PRO1 Covers LH/RH Smooth |

# Crank Adjustable Left Assembly PRO1

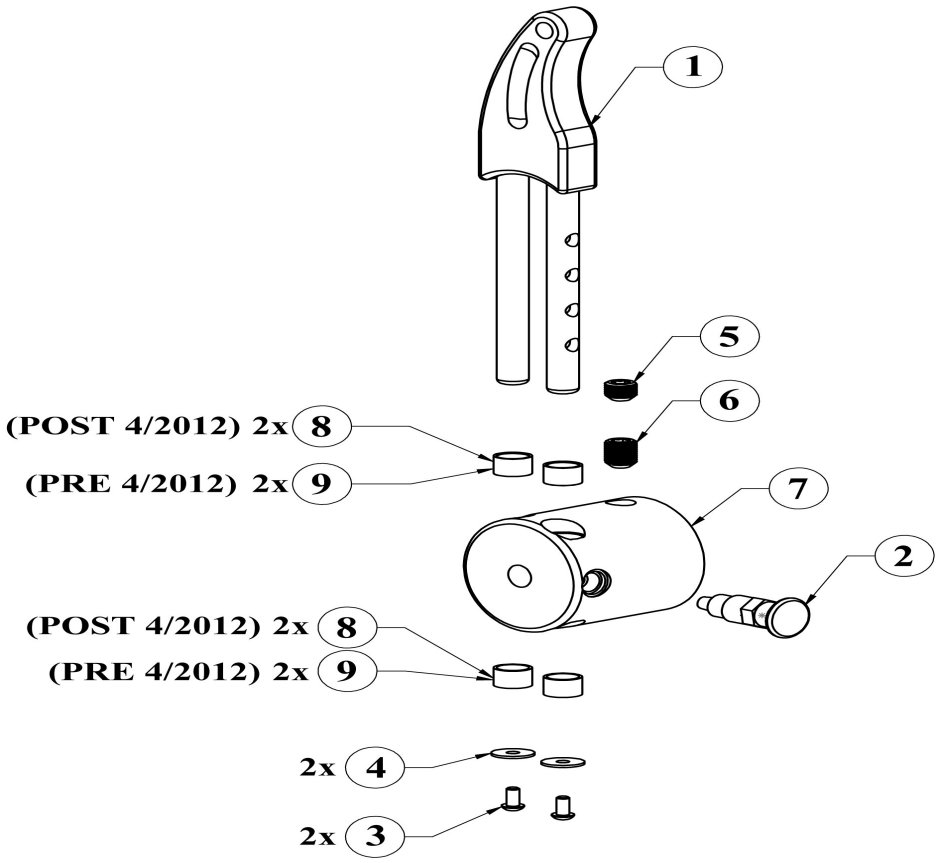


| Ref # | Part Number | Qty | Description |
|---|---|---|---|
| 1 | A3086 | 1 | Crank Upper Left Extended Assy |
| 2 | A5380 | 1 | Assy Pop-Pin Hub Flange Knob |
| 3 | 94049 | 2 | 1/4"-20 x 1/2" Zinc BSCS |
| 4 | 10537-08370 | 2 | .25 ID x .835 OD F/W |
| 5 | P3110 | 1 | Screw Set Socket Point Flat 5/8-18 x .5 |
| 6 | P3111 | 1 | Screw Set Socket Point Flat 5/8-18 x .75 |
| 7 | A3781 | 1 | Assy. Hub Crank PRO Upper |
| 8 | P5174 | 4 | Bushing IGUS Hub |
| 9 | P1756 | 1 | Bearing Igus rod handcrank |
| - | SB3253 | 1 | Kit,Crank,Extended,UB,Left |

# Crank Adjustable Right Assembly PRO1

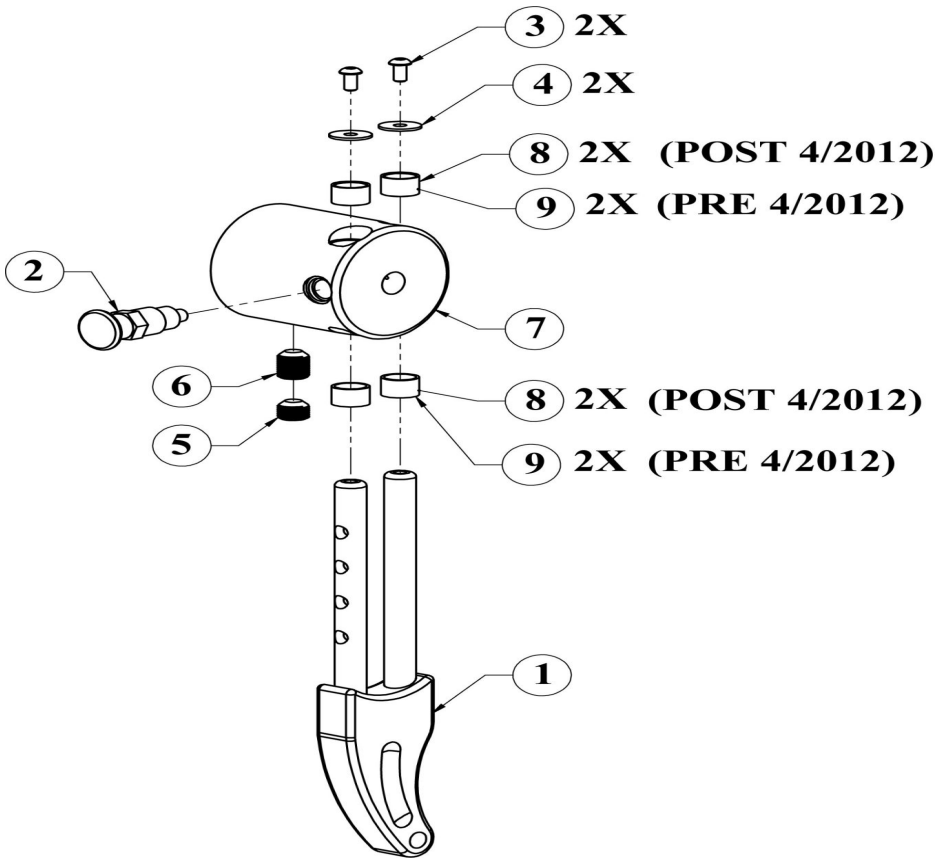


| Ref # | Part Number | Qty | Description |
|---|---|---|---|
| 1 | A3085 | 1 | Crank Upper Right Extended Ass |
| 2 | A5380 | 1 | Assy Pop-Pin Hub Flange Knob |
| 3 | 94049 | 2 | 1/4"-20 x 1/2" Zinc BSCS |
| 4 | 10537-08370 | 2 | .25 ID x .835 OD F/W |
| 5 | P3110 | 1 | Screw Set Socket Point Flat 5/8-18 x .5 |
| 6 | P3111 | 1 | Screw Set Socket Point Flat 5/8-18 x .75 |
| 7 | A3781 | 1 | Assy. Hub Crank PRO Upper |
| 8 | P5174 | 4 | Bushing IGUS Hub |
| 9 | P1756 | 1 | Bearing Igus rod handcrank |
| - | SB3161 | 1 | Kit,Crank,Extended,UB,PRO1,Rig |

# Gas Shock Assembly PRO1

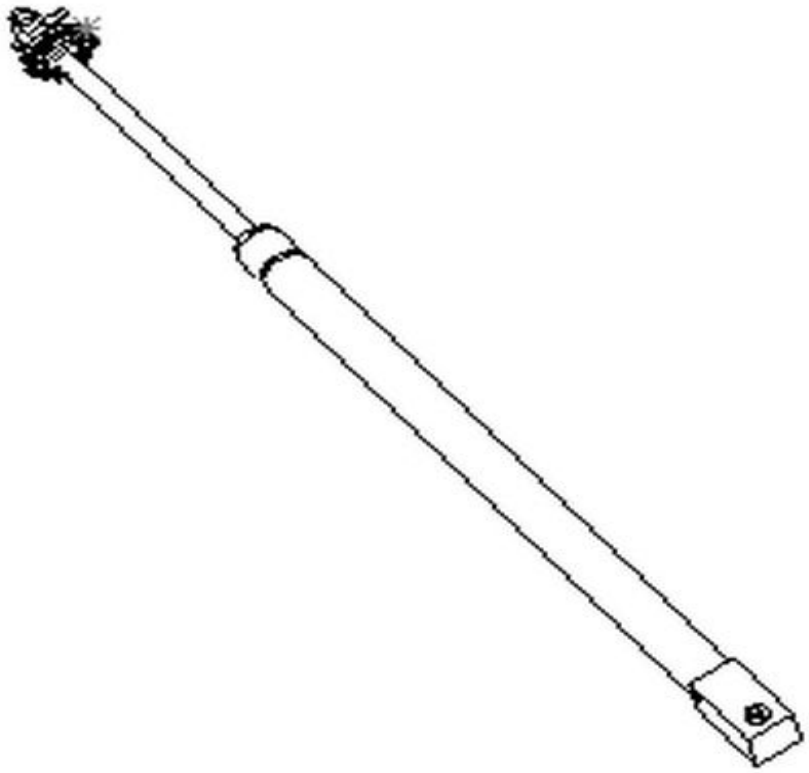

| Ref # | Part Number | Qty | Description |
|---|---|---|---|
| - | S4369 | 1 | Kit Spring Gas Rigid kLocking |

# Handle Crank Standard Gray Assembly PRO

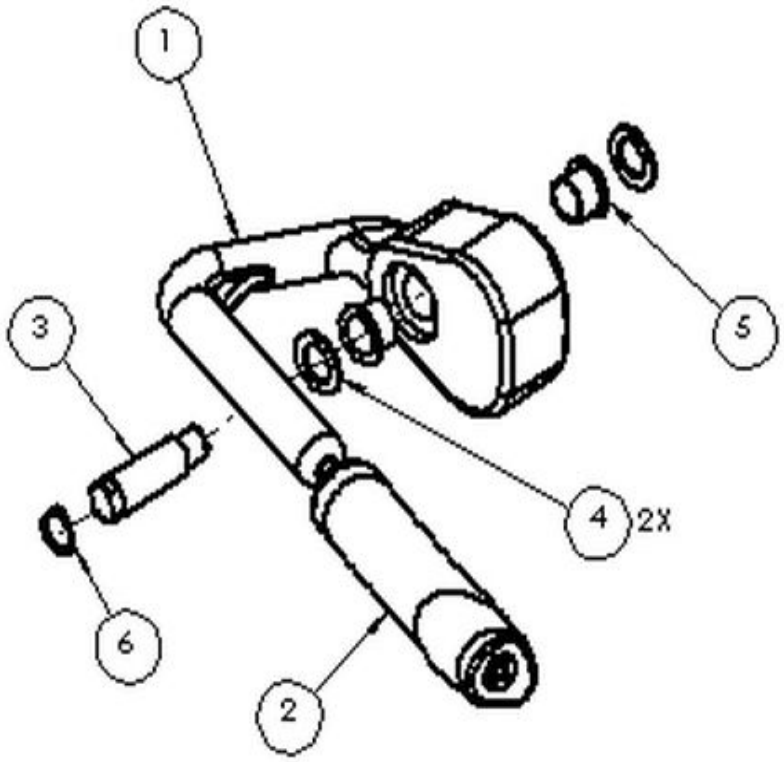


| Ref # | Part Number | Qty | Description |
|---|---|---|---|
| 1 | A1993 | 1 | NLA: Handle Handcrank PRO |
| 2 | P4610 | 1 | GRIP HANDLE HANDCRANK PRO V2 |
| 3 | A2534 | 1 | Shaft Handcrank |
| 4 | A1591 | 2 | Washer IGUS Handcrank Modified |
| 5 | P1173 | 2 | Brg. Flnged IGUS 5/8 Handc |
| 6 | 68013 | 1 | Snap Ring .588 ID x .035THK |
| - | S4863 | 1 | KIT ASSY HANDCRANK PRO V2 |

# Idler Assembly PRO1

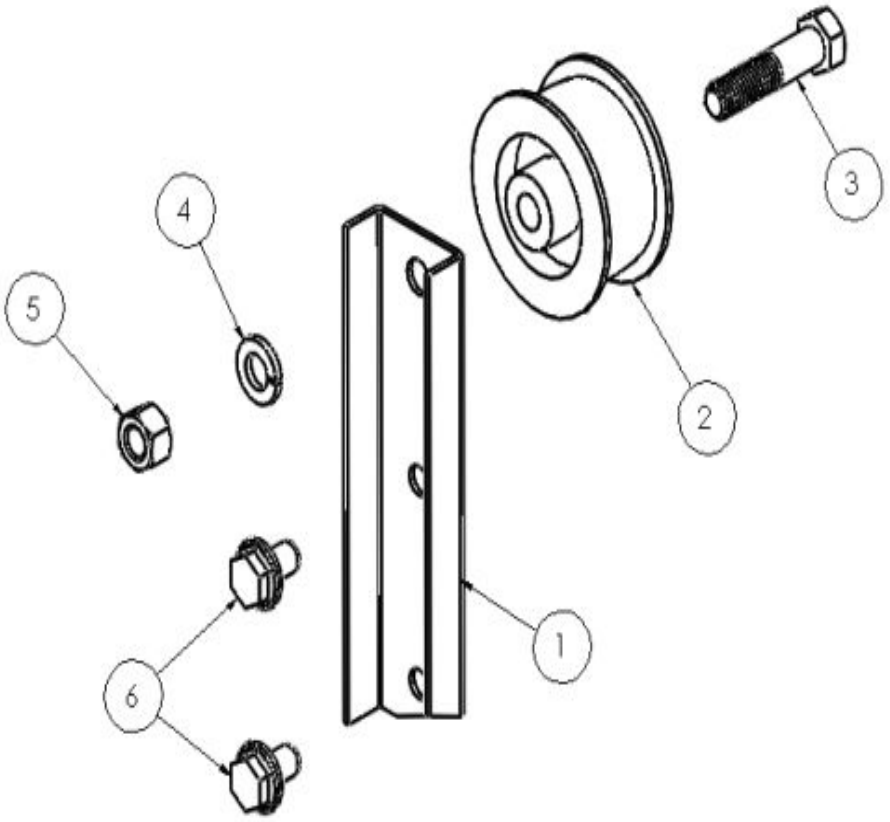


| Ref # | Part Number | Qty | Description |
|---|---|---|---|
| 1 | A1230 | 1 | Stiffener Side Plate Idler |
| 2 | P1091 | 1 | Idler Ellipt Recumbent |
| 3 | 13110 | 1 | 3/8"-16 x 1-3/4" Zinc HCS |
| 4 | 33893 | 1 | 3/8" Yllw Zinc Split L/W |
| 5 | 36106 | 1 | 3/8"-16 Zinc Hex Nut |
| 6 | 19651 | 2 | 5/16-18 x 1/2 Zinc FB |

# Spindle Bearing Drive Assembly

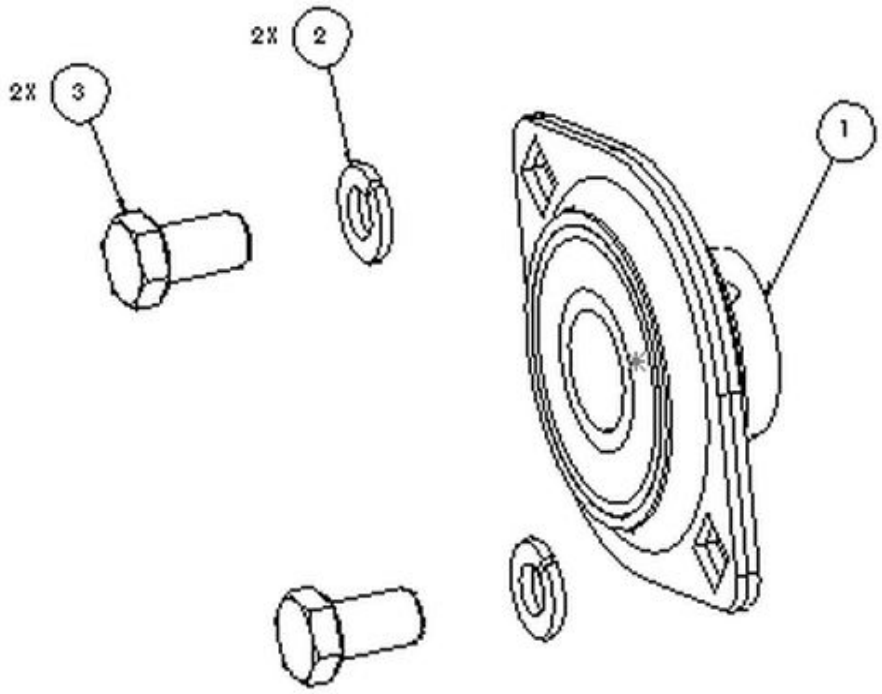


4X SETS REQUIRED PER UNIT

| Ref # | Part Number | Qty | Description |
|---|---|---|---|
| 1 | P1096 | 1 | Bearing Spindle Drive SB204-12 |
| 2 | 33892 | 2 | 5/16" Yellow Zinc Split L/W |
| 3 | 13052 | 2 | 5/16"-18 x 5/8" Zinc HCS |

# Spindle Sprocket Assembly PRO1

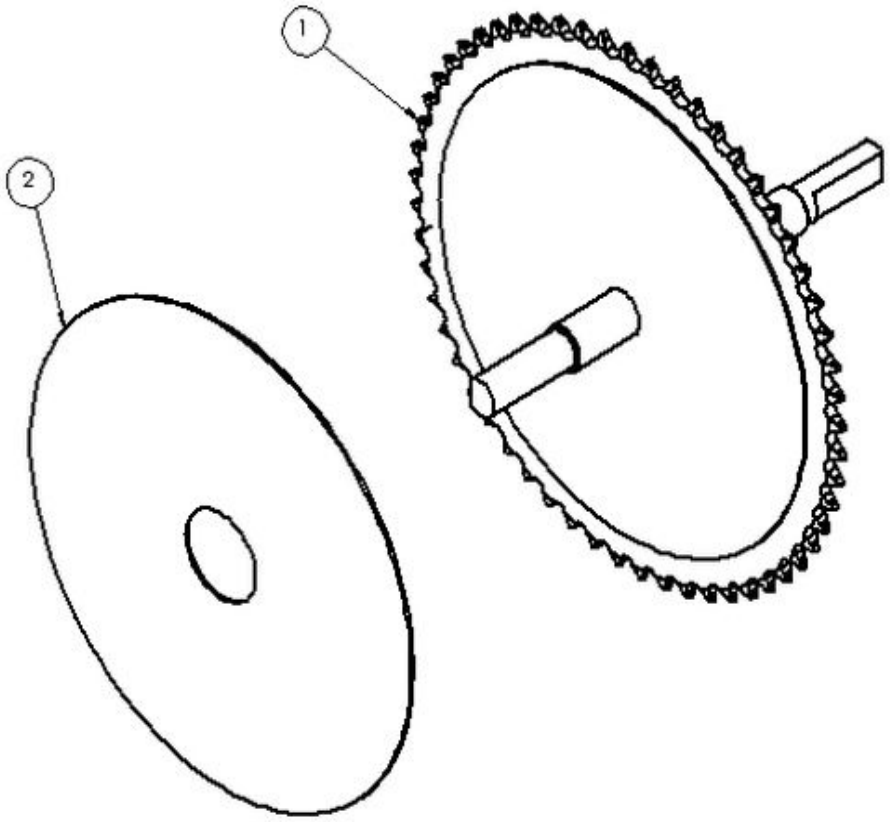


| Ref # | Part Number | Qty | Description |
|---|---|---|---|
| 1 | A2019 | 1 | Spindle Crank PRO1 Assy. |
| 2 | P1229 | 1 | Disc Deadening Sound 8.247" |

# Sprocket 40 Bi Directional Assembly PRO1

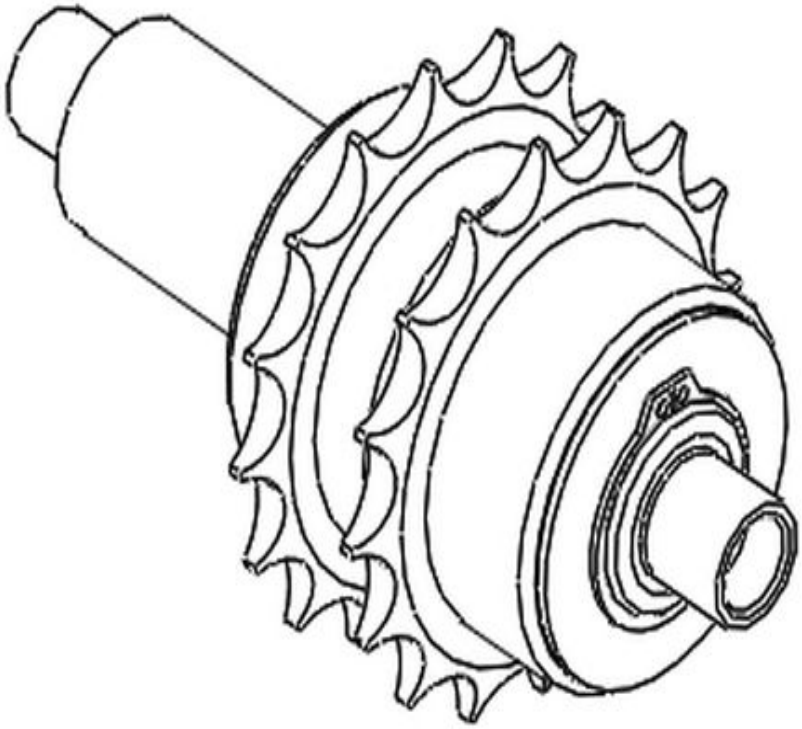

| Ref # | Part Number | Qty | Description |
|---|---|---|---|
| - | A3755 | 1 | Kit Shaft Bi-Direct. #40 |

# Sprocket 40 Jackshaft Pulley Assembly PRO1

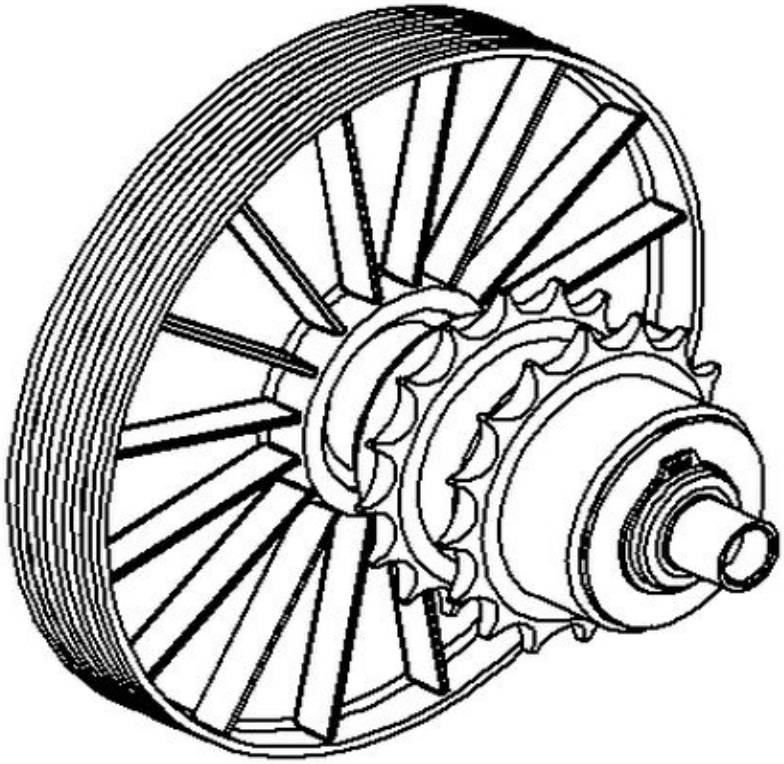

| Ref # | Part Number | Qty | Description |
|---|---|---|---|
| - | A3751 | 1 | Kit Jackshaft PRO1 #40 |

# Wiring PRO101-INT Post 5-2013

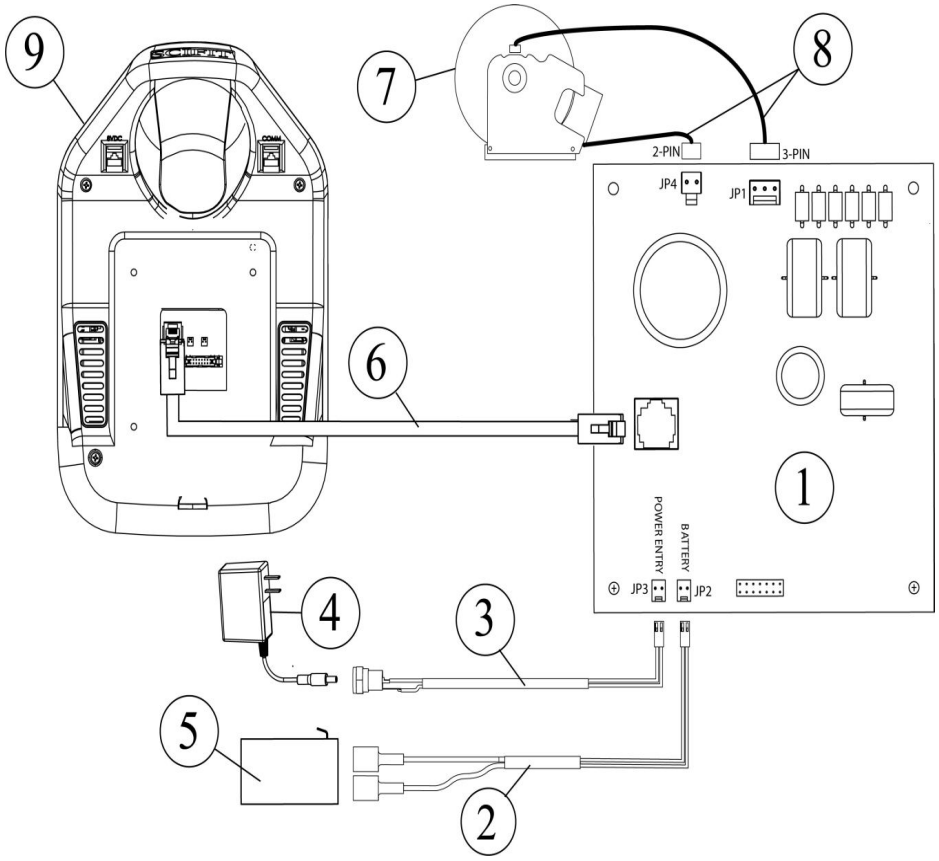


| Ref # | Part Number | Qty | Description |
|---|---|---|---|
| 1 | A5361 | 1 | Kit A5005 W/Mounting Bracket |
| 2 | P4733 | 1 | Cable Batt Intelli-Fit/Med PRO |
| 3 | P2199 | 1 | Cable Power Entry PRO 1 |
| 4 | P4861 | 1 | SCIFIT POWER SUPPLY AC ADAPTER WALL PACK 18V |
| 5 | P1564 | 1 | Battery Rechargable Cordless |
| 6 | P4740 | 1 | Cable Comm 30" Intelli-Fit PRO |
| 7 | S1906 | 1 | Kit Brake w/60mm Pulley Bikes |
| 8 | S4454 | 1 | CABLES IND. BRAKE 3 & 2 PIN |
| 9 | LCD-EN-01 | 1 | SCIFIT LCD Console English |

# Wiring PRO101-INT Pre 5-2013

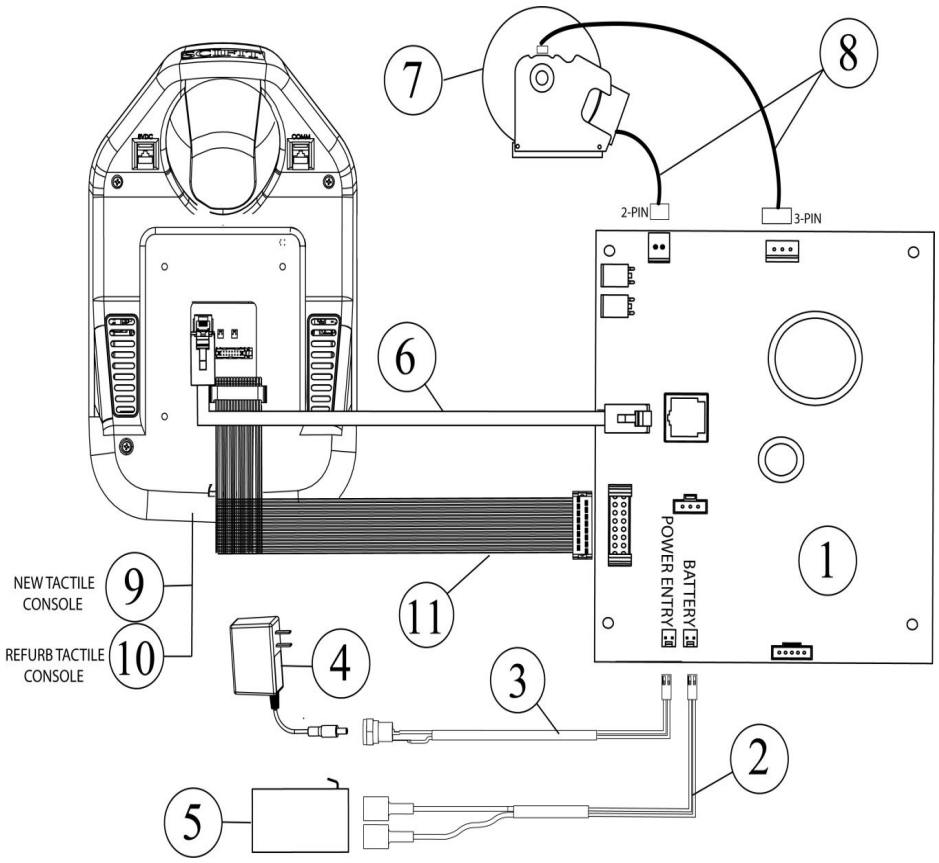


| Ref # | Part Number | Qty | Description |
|---|---|---|---|
| 1 | S6189 | 1 | Kit A5361 W/Tactile Firm PRE 5 |
| 2 | P4733 | 1 | Cable Batt Intelli-Fit/Med PRO |
| 3 | P2199 | 1 | Cable Power Entry PRO 1 |
| 4 | P4861 | 1 | SCIFIT POWER SUPPLY AC ADAPTER WALL PACK 18V |
| 5 | P1564 | 1 | Battery Rechargable Cordless |
| 6 | P4740 | 1 | Cable Comm 30" Intelli-Fit PRO |
| 7 | S1906 | 1 | Kit Brake w/60mm Pulley Bikes |
| 8 | S4454 | 1 | CABLES IND. BRAKE 3 & 2 PIN |
| 9 | S5195 | 1 | Kit A4604/Strain Relief.Wirele |
| 10 | S5196R | 1 | Kit A4604R/Strain Relief.Wirel |
| 11 | A5193 | 1 | Cable Assy Display 32" V2 |