REVISION HISTORY				
REV	DATE	DESCRIPTION	ECO	BY
A	8/20/2014	RELEASE	14739	OT
B	7/3/2017	KNOBS CHANGED TO ROUND STYLE.	15737	BA

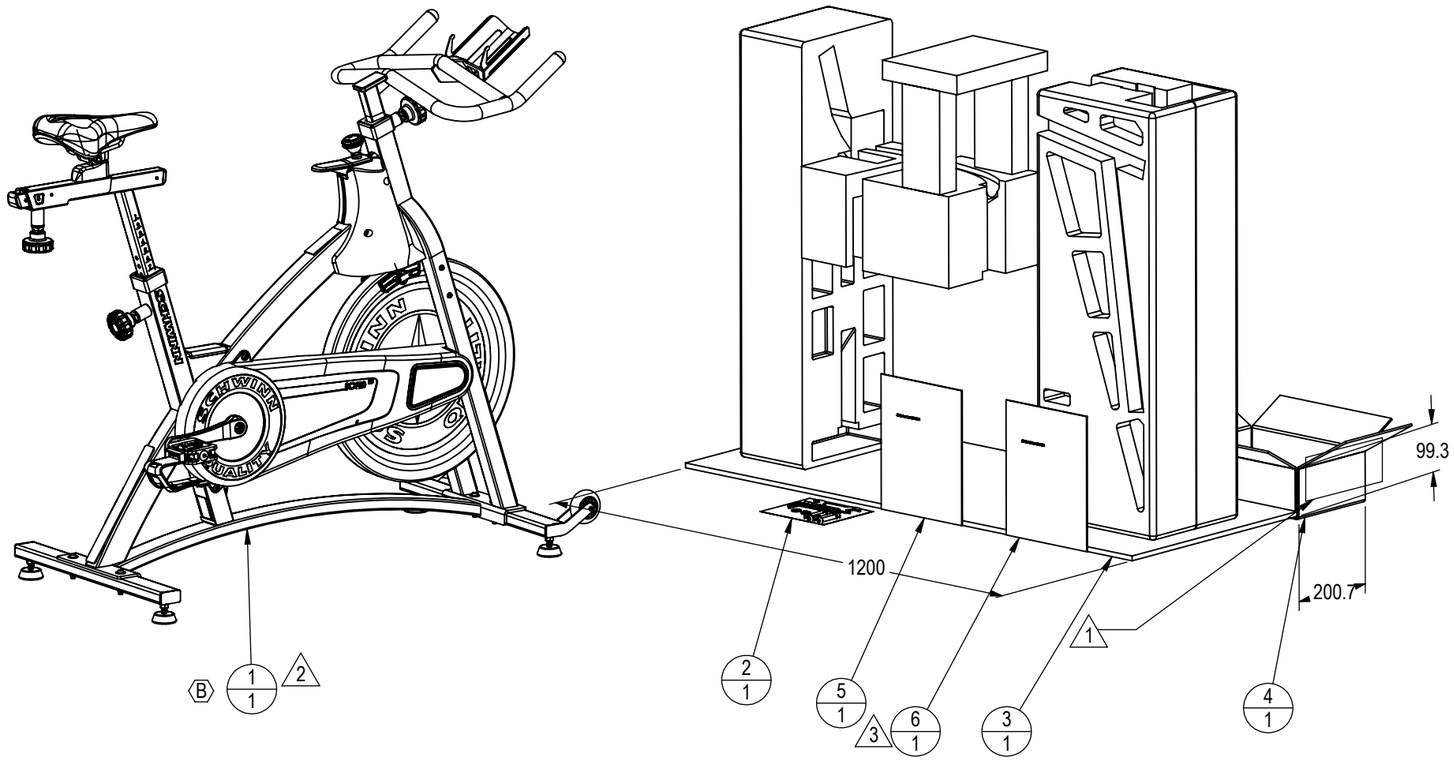

NOTES:

1. LABEL INFORMATION:
   a. MODEL: SCHWINN IC PRO 20
   b. SKU: 100182
   c. SERIAL NUMBER: PER DOCUMENT 050-2125
   d. COUNTRY OF ORIGIN TO BE PRINTED ON PEEL LABEL
2. TO BE BAGGED IN A PLASTIC BAG TO PREVENT CONTACT WITH FOAM INSERTS
3. DOCUMENTS TO BE PLACED IN BAG 050-2080
4. TO BE PRE-PACKED WITH DESSICANT TO PREVENT HUMIDITY
5. SHIPPING WEIGHT 120 LBS

	ITEM NO.	PART NUMBER	DESCRIPTION	QTY.
B	1	100182-001	IC PRO 20	1
	2	740-8767	TOOLCARD, IC PRO 20	1
	3	740-8768	FOAM, PACKAGING, IC PRO 20	1
	4	050-2157	BOX, 12x8x4, SINGLE WALL GR/38	1
	5	030-0006	MANUAL, OWNERS, AC BIKES	1
	6	030-0007	MANUAL, INSTALL, AC BIKES	1

DOCUMENT STATUS:
RELEASE

NOTICE OF PROPRIETARY INFORMATION

THIS DOCUMENT SHALL NOT BE REPRODUCED NOR SHALL THE INFORMATION CONTAINED HEREIN BE USED BY OR DISCLOSED TO OTHER EXCEPT AS EXPRESSLY AUTHORIZED BY CORE HEALTH & FITNESS, LLC.

CLASS OF WORK		UNLESS OTHERWISE SPECIFIED DIMS ARE IN mm. TOLERANCES FOR MEASURE OF LENGTH ARE:							ANGLES = ±2°
		0.5 to 3	> 3 to 6	> 6 to 30	> 30 to 120	> 120 to 400	> 400 to 1000	> 1000 to 2000	> 2000
FINE		±0.05	±0.05	±0.1	±0.15	±0.2	±0.3	±0.5	-----
MEDIUM	X	±0.1	±0.1	±0.2	±0.3	±0.5	±0.8	±1.2	±2
COARSE		±0.2	±0.3	±0.5	±0.8	±1.2	±2	±3	±4
VERY COARSE		-----	±0.5	±1	±1.5	±2.5	±4	±6	±8

MATERIAL
SEE BOM

FINISH
SEE BOM

VENDOR: P/N: N/A

THIRD ANGLE PROJECTION

	INITIAL	DATE
DRAWN	OT	8/12/2014
CHECKED		
APPROVED		
	U.O.M.	MM

CORE HEALTH & FITNESS, LLC
4400 NE 77th Ave., Suite 300
Vancouver, WA 98662

CORE PART NO: 100182
REV: B

TITLE: IC PRO 20

SCALE: 1:12 | SHEET 1 OF 1 | SHEET SIZE: B

NOTES:

REVISION HISTORY				
REV	DATE	DESCRIPTION	ECO	BY
A	7/31/2014	RELEASE	14739	OT
B	7/3/2017	001-7345 WAS 002-2265, 740-8745 UPDATED FOR NEW STYLE KNOB.	15737	BA
C	11/13/2018	REMOVE 740-8745; ADD 1X 001-7345, 1X 718-5764, 1X 740-9090, 1X 740-9091	16032	BA

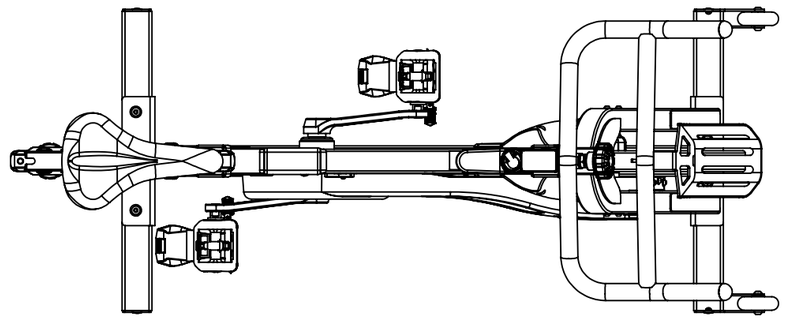

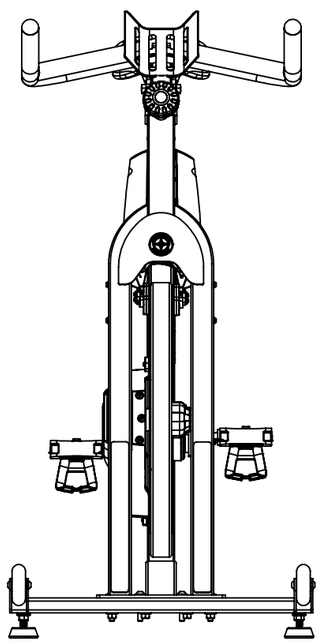

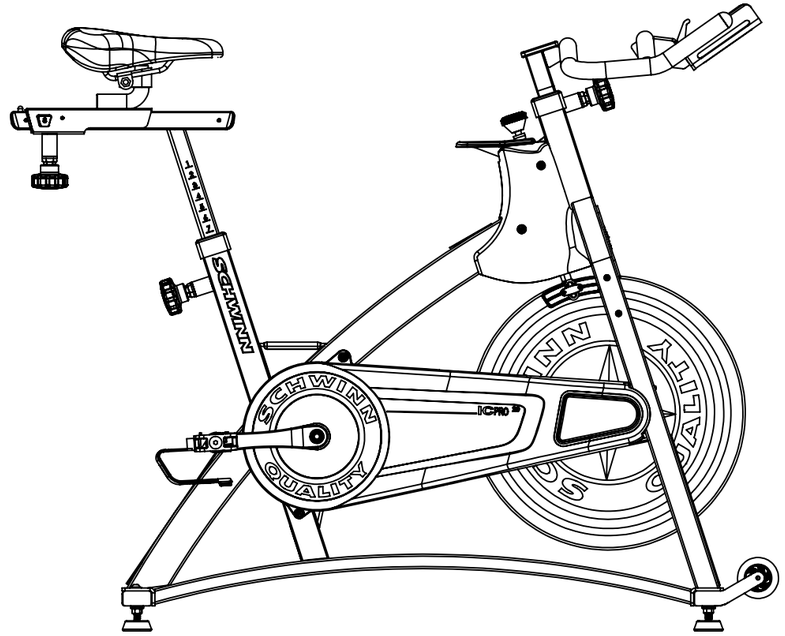

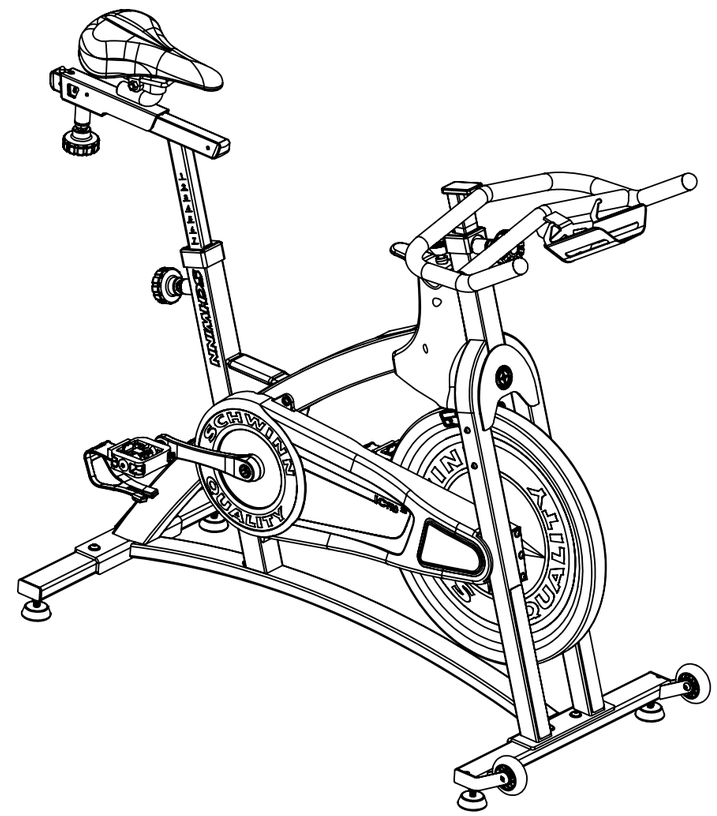

DOCUMENT STATUS:
RELEASE

NOTICE OF PROPRIETARY INFORMATION

THIS DOCUMENT SHALL NOT BE REPRODUCED NOR SHALL THE INFORMATION CONTAINED HEREIN BE USED BY OR DISCLOSED TO OTHER EXCEPT AS EXPRESSLY AUTHORIZED BY CORE HEALTH & FITNESS, LLC.

CLASS OF WORK		UNLESS OTHERWISE SPECIFIED DIMS ARE IN mm. TOLERANCES FOR MEASURE OF LENGTH ARE:							ANGLES = ±2°
		0.5 to 3	> 3 to 6	> 6 to 30	> 30 to 120	> 120 to 400	> 400 to 1000	> 1000 to 2000	> 2000
FINE		±0.05	±0.05	±0.1	±0.15	±0.2	±0.3	±0.5	-----
MEDIUM	X	±0.1	±0.1	±0.2	±0.3	±0.5	±0.8	±1.2	±2
COARSE		±0.2	±0.3	±0.5	±0.8	±1.2	±2	±3	±4
VERY COARSE		-----	±0.5	±1	±1.5	±2.5	±4	±6	±8

MATERIAL
SEE BOM

FINISH
SEE BOM

VENDOR: P/N:

THIRD ANGLE PROJECTION

	INITIAL	DATE
DRAWN	OT	05/23/2018
CHECKED		
APPROVED		
	U.O.M.	MM

CORE HEALTH & FITNESS, LLC
4400 NE 77th Ave., Suite 300
Vancouver, WA 98662

CORE PART NO: 100182-001
REV: C

TITLE: IC PRO 20

SCALE: 1:10 | SHEET 1 OF 7 | SHEET SIZE: B

	ITEM NO.	PART NUMBER	DESCRIPTION	DEFAULT/QTY.
	1	000-0011	AC PEDAL ASSY SET (1261-WAMD10-001)	1
C	2	001-7345	KNOB, POP PIN, LONG, ASSEMBLY, SCHWINN	3
	3	002-2780	LEFT CRANK ARM, ISIS	1
	4	003-1508	ISIS BB, 68 X 113mm	1
	5	003-7529	BRAKE ASSY	1
	6	003-7555	STABILIZER, IC PRO 20, REAR	1
	7	003-7582	RUBBER STOPPER, BRAKE ASSY	2
	8	015-0001	LABEL, SERIAL, IC PRO	1
	9	015-0007	CHAIN, 1/2 X 1/8", 112L, KMC	1
	10	015-0009	RIGHT CRANK W/SPROCKET, ISIS M12, 1/8	1
	11	050-1955	LABEL, WARNING, COMM, SPINNERS	1
	12	050-2115	LABEL, COUNTRY OF ORIGIN	1
	13	110-3399	SCREW, M8x20MM, BHC,CS,HK,BO	2
	14	110-3467	Screw, M4x0.7, 8mm, PHM, PH, SS	2
	15	110-3557	SCREW,M5X0.8,BHC,HE,SS	4
	16	110-3619	NUT, M10X1, NYLOC,SS	1
	17	110-3620	SCREW, M8X1.25X45, BHC, SS	4
	18	120-3361	WASHER M5	14
C	19	718-5764	SADDLE, BLACK, AC BIKE	1
	20	731-0585	WASHER,M4	2
	21	731-1363	NUT, M6X1.0, NYLOC	1
	22	740-7146	Washer, M8, Ø8.5xØ19x1.2mm, SS	10
	23	740-7167	Washer, Lock, Split, M6	2
	24	740-7174	NUT, M6X1, HE, SS	2
	25	740-7176	SCREW, M6X1.0X50, HHM, HE, SS	2
	26	740-7303	Nut, Rivet, Hex, M5X0.8	11
	27	740-8741_001	ASSY,CHAINGUARD, OUTER, ICPRO20	1
	28	740-8741_002	CHAINGUARD, INNER, IC PRO 20	1
	29	740-8741_003	CHAINGUARD, WING, IC PRO 20	1

	ITEM NO.	PART NUMBER	DESCRIPTION	DEFAULT/QTY.
	30	740-8741_004	CHAINGUARD, FRONT, IC PRO 20	1
	31	740-8741_006	CAP, HOLE, CHAINGUARD, IC PRO 20	1
	32	740-8742	ASSY, FLYWHEEL, IC PRO 20	1
	33	740-8743	ASSY, FRAME, IC PRO 20	1
	34	740-8744	ASSY, STABILIZER, FRONT, IC PRO 20	1
	35	740-8746	ASSY, H BAR SINGLE BOTTLE, IC PRO 20	1
	36	740-8749	SLEEVE, HBAR SEATPOST, IC PRO	2
	37	740-8750	HEAD BADGE, SCHWINN, 40MM	1
	38	740-8751	E STOP KNOB, IC PRO	1
	39	740-8752	BRAKE KNOB, IC PRO	1
	40	740-8753	BRAKE HOUSING, DR, IC PRO 20	1
	41	740-8754	BRAKE HOUSING, NDR, IC PRO 20	1
	42	740-8755	EXTL RET RING, 5MM, ZP	1
	43	740-8756	SPACER, BALL END, BRAKE, IC PRO	1
	44	740-8757	SHAFT, E BRAKE, IC PRO	1
	45	740-8758	BUSHING, E BRAKE, IC PRO	2
	46	740-8759	BLOCK, 3/8-16, BRAKE, IC PRO	1
	47	740-8761	FINGERGUARD, 16T, IC PRO 20	1
	48	740-8762	FINGERGUARD, 72T, ACPP	1
	49	740-8764	STEPOVER PAD, IC PRO 20	1
	50	740-8770	DECAL, SEATTUBE, IC PRO 20	2
	51	740-8772	STEP PAD, IC PRO 20	3
C	52	740-9090	ASSY, SEAT POST WITH ENDCAPS	1
C	53	740-9091	ASSY, SEAT SLIDER WITH SLEEVES	1
	54	80044	CRANK BOLT 8MM HEX FOR ISIS	2
	55	902-5550	SCW-RHP M5x0.8x12 SS	16
	56	902-6063	WSH-FLAT M6 WIDE SS	1
	57	98009	~~ROD CARRIER~~	~~1~~

CORE HEALTH & FITNESS, LLC
4400 NE 77th Ave., Suite 300
Vancouver, WA 98662

CORE PART NO	REV
100182-001	C

TITLE
IC PRO 20

SCALE: 1:50	SHEET 2 OF 7	SHEET SIZE: B

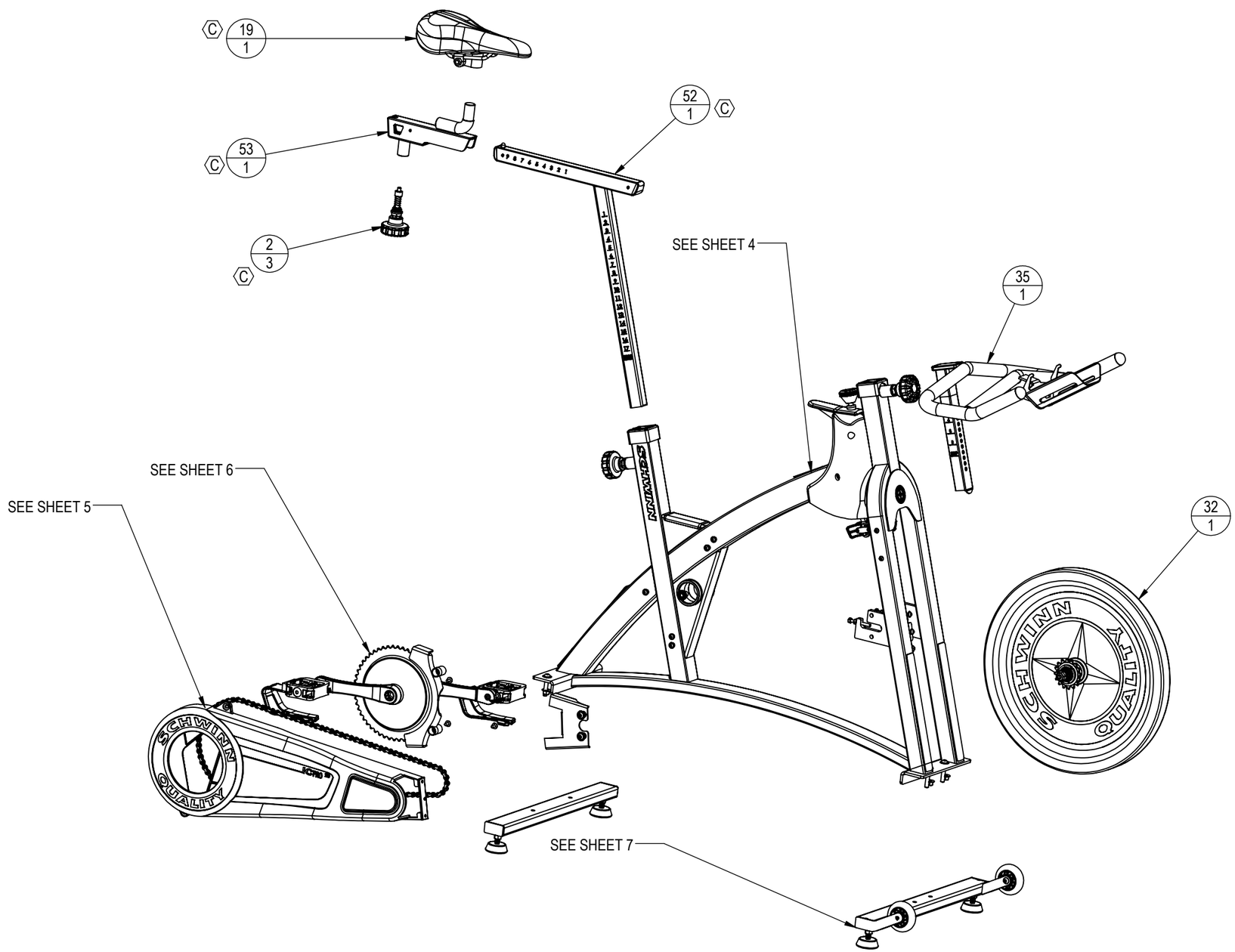

CORE HEALTH & FITNESS, LLC
4400 NE 77th Ave., Suite 300
Vancouver, WA 98662

CORE PART NO	REV
100182-001	**C**

TITLE
IC PRO 20

SCALE: 1:10	SHEET 3 OF 7	SHEET SIZE: B

NOTES:
1. CLEAN SURFACE W DENATURED ALCOHOL PRIOR TO ADHERING LABEL OR LOGOS
2. INSTALLATION LOAD FOR RIVNUTS: USE MFG SPEC FOR PROPER CLINCH FORCE
3. TORQUE TO 47-54 N-m
4. TORQUE TO 15 N-m
5. APPLY LOCTITE 242 OR 243 MED. STRENGTH THREAD LOCKER

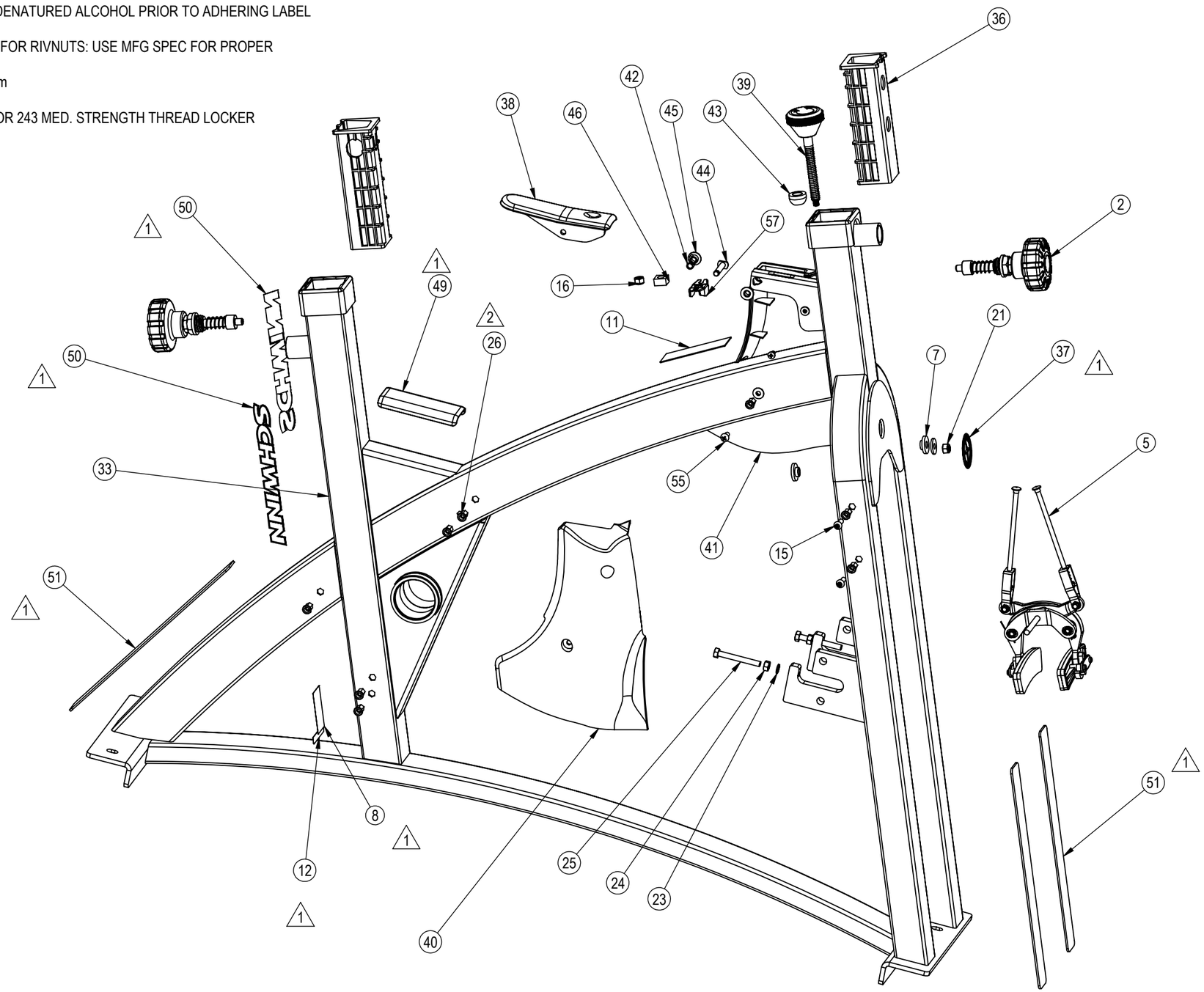

CORE HEALTH & FITNESS, LLC 4400 NE 77th Ave., Suite 300 Vancouver, WA 98662	
CORE PART NO **100182-001**	REV **C**
TITLE IC PRO 20	
SCALE: 1:5	SHEET 4 OF 7 / SHEET SIZE: B

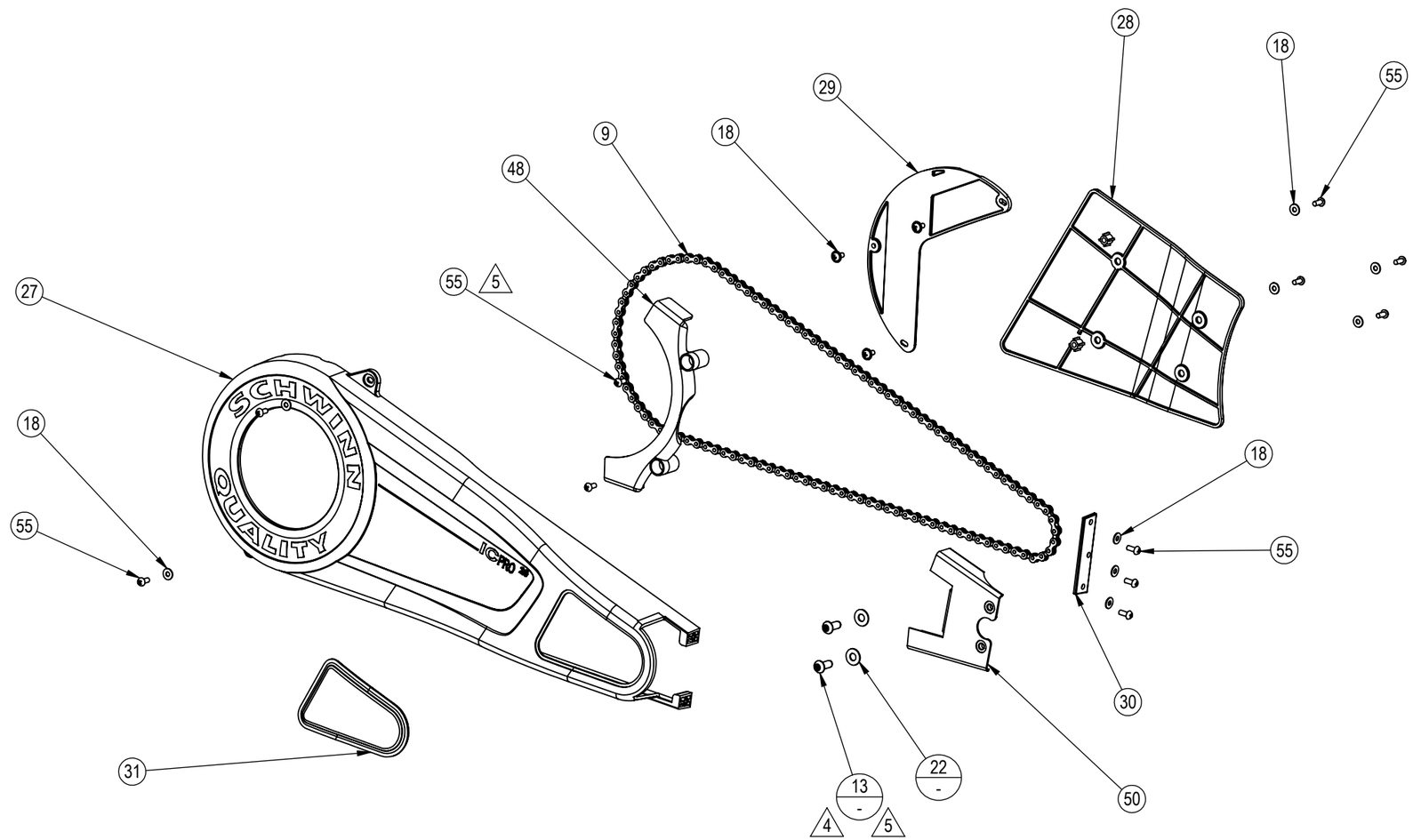

CORE HEALTH & FITNESS, LLC
4400 NE 77th Ave., Suite 300
Vancouver, WA 98662

CORE PART NO	REV
100182-001	**C**

TITLE
IC PRO 20

SCALE: 1:6	SHEET 5 OF 7	SHEET SIZE: B

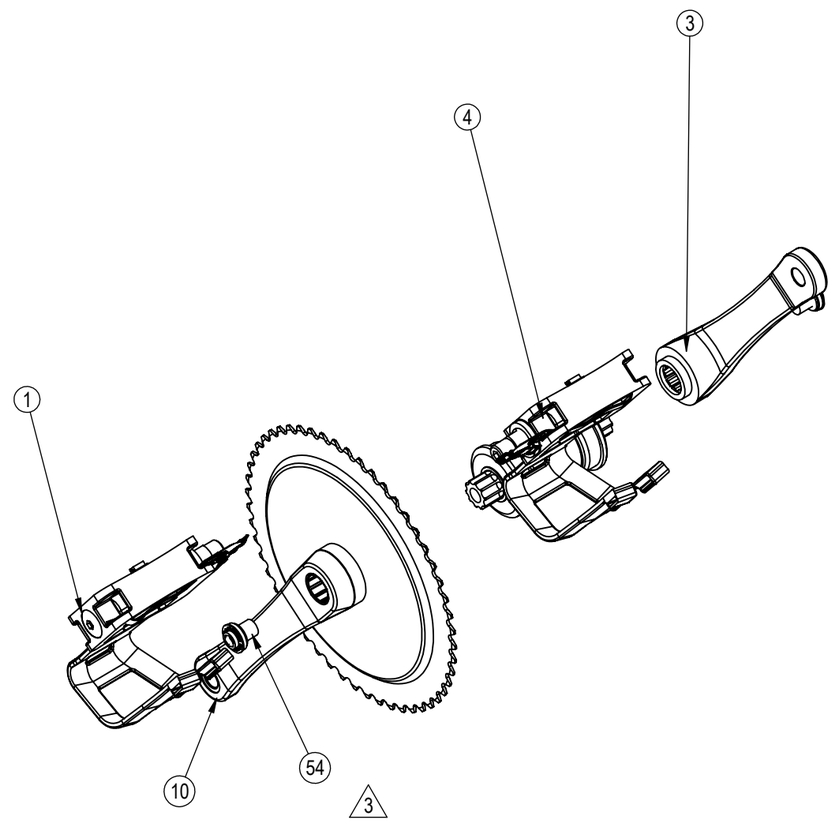

CORE HEALTH & FITNESS, LLC
4400 NE 77th Ave., Suite 300
Vancouver, WA 98662

CORE PART NO	REV
100182-001	**C**

TITLE
IC PRO 20

SCALE: 1:4	SHEET 6 OF 7	SHEET SIZE: B

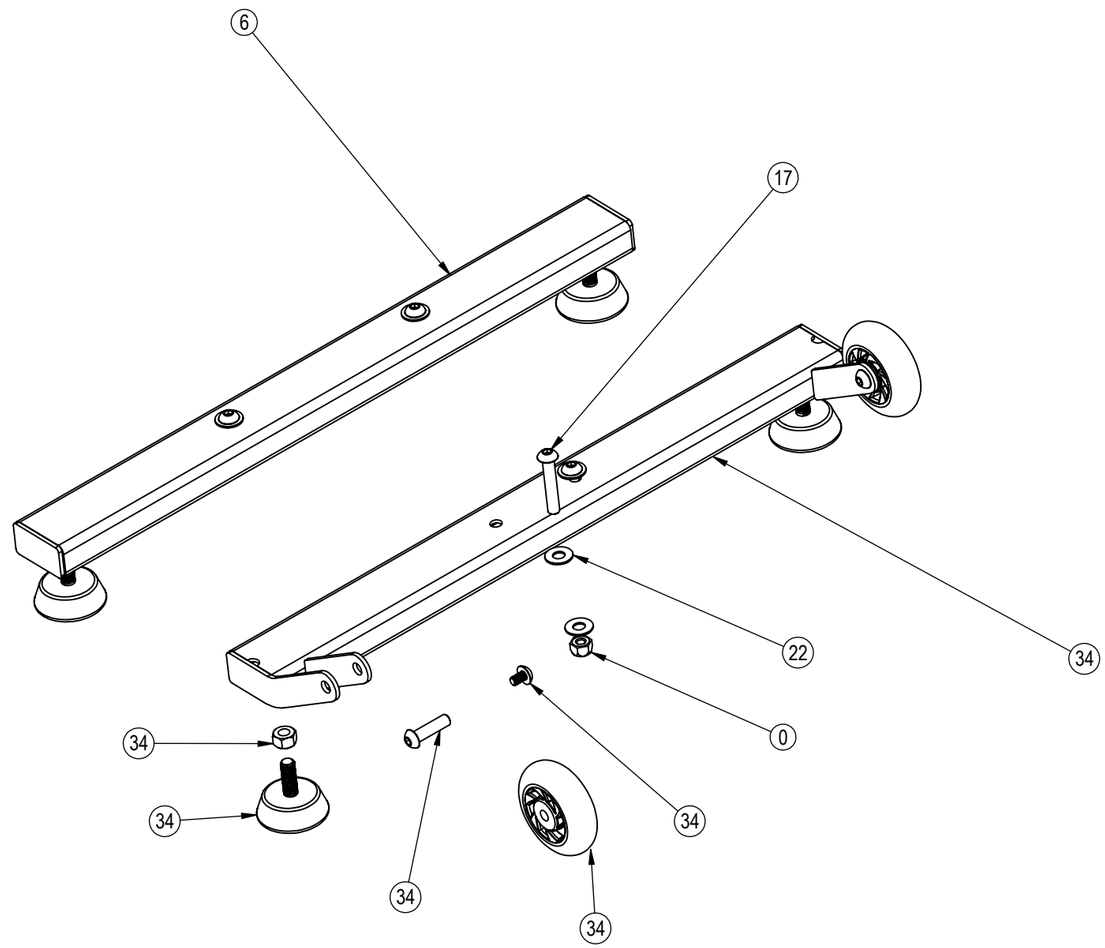

CORE HEALTH & FITNESS, LLC
4400 NE 77th Ave., Suite 300
Vancouver, WA 98662

CORE PART NO	REV
100182-001	**C**

TITLE
IC PRO 20

SCALE: 1:4	SHEET 7 OF 7	SHEET SIZE: B

NOTES:

REVISION HISTORY				
REV	DATE	DESCRIPTION	ECO	BY
A	10/29/2014	RELEASE	14810	OT

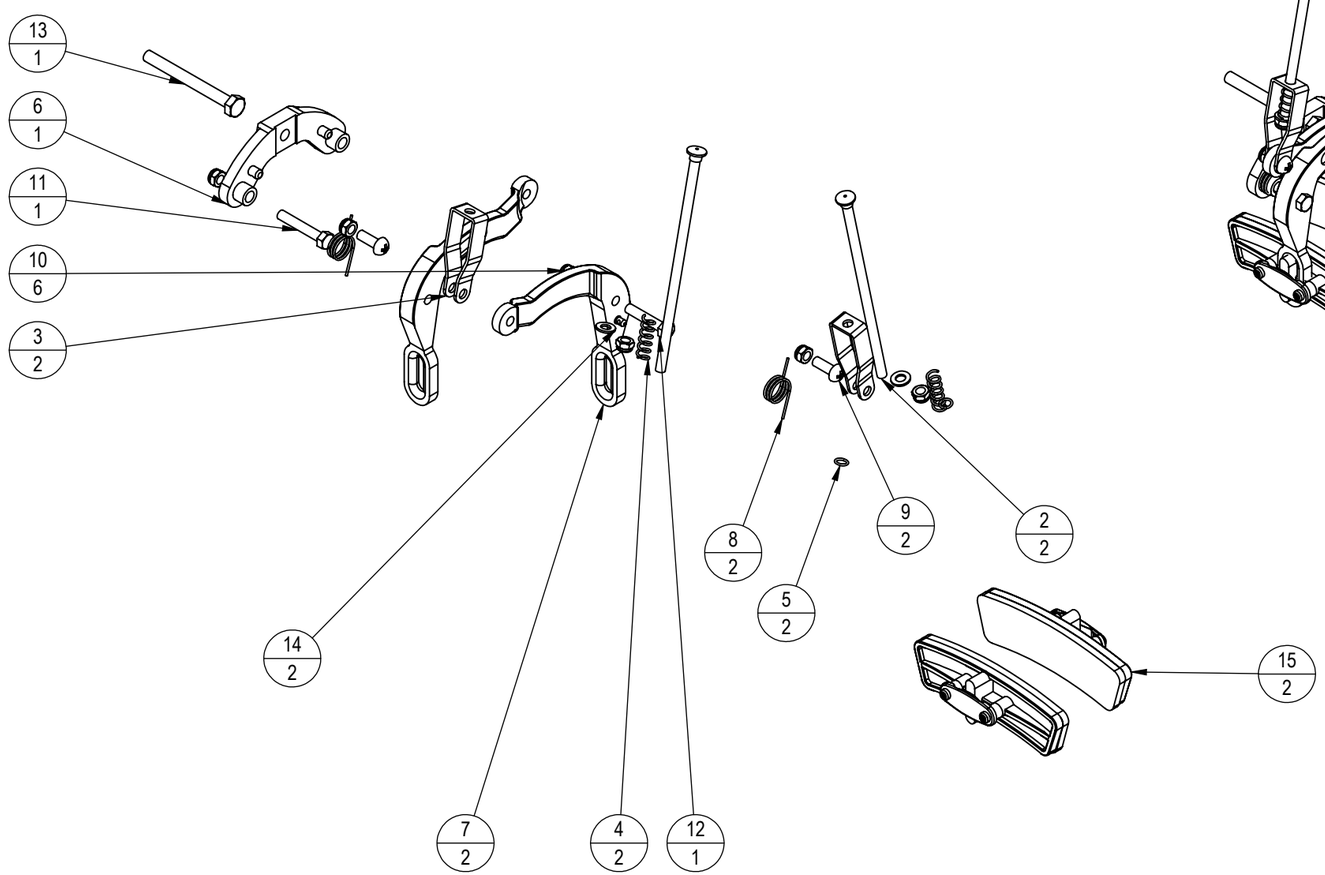

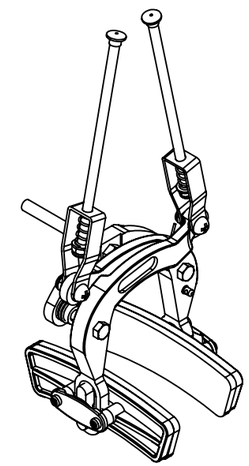

ITEM NO.	PART NUMBER	DESCRIPTION	QTY.
1	84965	RESISTANCE ASSY	1
2	003-7523	SHAFT,BRAKE ASSY	2
3	003-7526	BRACKET, BRAKE ASSY	2
4	003-7525	SPRING,BRAKE ASSY	2
5	003-7524	RUBBER STOPER, BRAKE ASSY	2
6	003-7527	SUPPORTING BRACKET	1
7	003-7528	ADJUSTING BRACKET, BRAKE ASSY	2
8	003-7531	SPRING, BRAKE ASSY	2
9	902-5551	SCW-RHP M5x0.8x14 SS	2
10	902-4169	NUT NL M5-0.5 SS	6
11	902-4475	SCW-HHCS M5x0.8x30	1
12	902-4474	SCW-HHCS M5x0.8x25	1
13	902-4494	SCW-HHCS M6x1.0x60	1
14	902-6059	WSH-FLAT M5 REGUALR SS	2
15	002-6896	BRAKE PAD ASSEMBLY	2

DOCUMENT STATUS:

NOTICE OF PROPRIETARY INFORMATION

THIS DOCUMENT SHALL NOT BE REPRODUCED OR SHALL THE INFORMATION CONTAINED HEREIN BE USED BY OR DISCLOSED TO OTHER EXCEPT AS EXPRESSLY AUTHORIZED BY CORE HEALTH & FITNESS, LLC.

SEE BOM

CLASS OF WORK		UNLESS OTHERWISE SPECIFIED DIMS ARE IN mm. TOLERANCES FOR MEASURE OF LENGTH ARE:							ANGLES = ±2°
		0.5 to 3	> 3 to 6	> 6 to 30	> 30 to 120	> 120 to 400	> 400 to 1000	> 1000 to 2000	> 2000
FINE		±0.05	±0.05	±0.1	±0.15	±0.2	±0.3	±0.5	-----
MEDIUM	X	±0.1	±0.1	±0.2	±0.3	±0.5	±0.8	±1.2	±2
COARSE		±0.2	±0.3	±0.5	±0.8	±1.2	±2	±3	±4
VERY COARSE		-----	±0.5	±1	±1.5	±2.5	±4	±6	±8

MATERIAL
SEE INDIVIDUAL PARTS

FINISH

VENDOR: P/N:

THIRD ANGLE PROJECTION

	INITIAL	DATE
DRAWN	OT	10/29/2014
CHECKED		
APPROVED		
	U.O.M.	MM

CORE HEALTH & FITNESS, LLC
4400 NE 77th Ave., Suite 300
Vancouver, WA 98662

CORE PART NO: 003-7529
REV: A

TITLE: BRAKE ASSY

SCALE: 1:3 | SHEET 1 OF 1 | SHEET SIZE: B

REVISION HISTORY				
REV	DATE	DESCRIPTION	ECO	BY
A	8/18/2014	RELEASE	14739	OT
B	3/16/2016	REMOVE: 140-3576 (1), 740-8747 (1), 740-8748 (1), 740-8773 (1), 740-8775 (1), 740-8776 (1); ADD: 740-9090 (1), 740-9091 (1)	15269	MMG
C	6/16/2017	001-7345 WAS 002-2265.	15737	BA

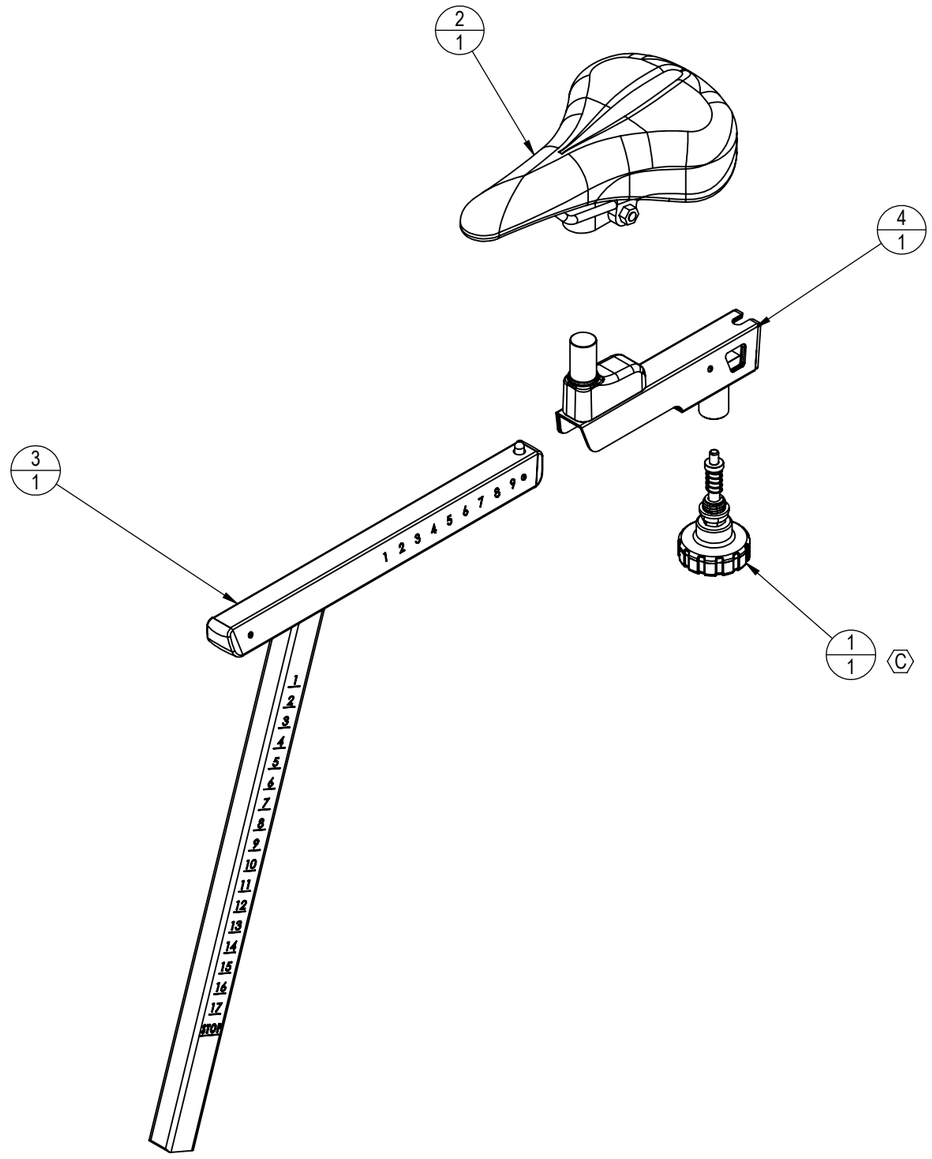

ITEM NO.	PART NUMBER	DESCRIPTION	QTY.
C 1	001-7345	KNOB, POP PIN, LONG, ASSEMBLY, SCHWINN	1
2	003-5821	VELO SADDLE, 30610	1
3	740-9090	ASSY, SEAT POST WITH ENDCAPS	1
4	740-9091	ASSY, SEAT SLIDER WITH SLEEVES	1

DOCUMENT STATUS:
RELEASE

NOTICE OF PROPRIETARY INFORMATION

THIS DOCUMENT SHALL NOT BE REPRODUCED NOR SHALL THE INFORMATION CONTAINED HEREIN BE USED BY OR DISCLOSED TO OTHER EXCEPT AS EXPRESSLY AUTHORIZED BY CORE HEALTH & FITNESS, LLC.

CLASS OF WORK		UNLESS OTHERWISE SPECIFIED DIMS ARE IN mm. TOLERANCES FOR MEASURE OF LENGTH ARE:						ANGLES = ±2°	
		0.5 to 3	> 3 to 6	> 6 to 30	> 30 to 120	> 120 to 400	> 400 to 1000	> 1000 to 2000	> 2000
FINE		±0.05	±0.05	±0.1	±0.15	±0.2	±0.3	±0.5	-----
MEDIUM	X	±0.1	±0.1	±0.2	±0.3	±0.5	±0.8	±1.2	±2
COARSE		±0.2	±0.3	±0.5	±0.8	±1.2	±2	±3	±4
VERY COARSE		-----	±0.5	±1	±1.5	±2.5	±4	±6	±8

MATERIAL
SEE BOM

FINISH
SEE BOM

VENDOR: P/N:

THIRD ANGLE PROJECTION

	INITIAL	DATE
DRAWN	OT	8/18/2014
CHECKED		
APPROVED		
	U.O.M.	MM

CORE HEALTH & FITNESS, LLC
4400 NE 77th Ave., Suite 300
Vancouver, WA 98662

CORE PART NO: 740-8745
REV: C

TITLE: ASSY, SEAT POST W SEAT IC PRO 20

SCALE: 1:5 | SHEET 1 OF 1 | SHEET SIZE: B