LifeFitness

95T-XXXXX-03 Treadmill

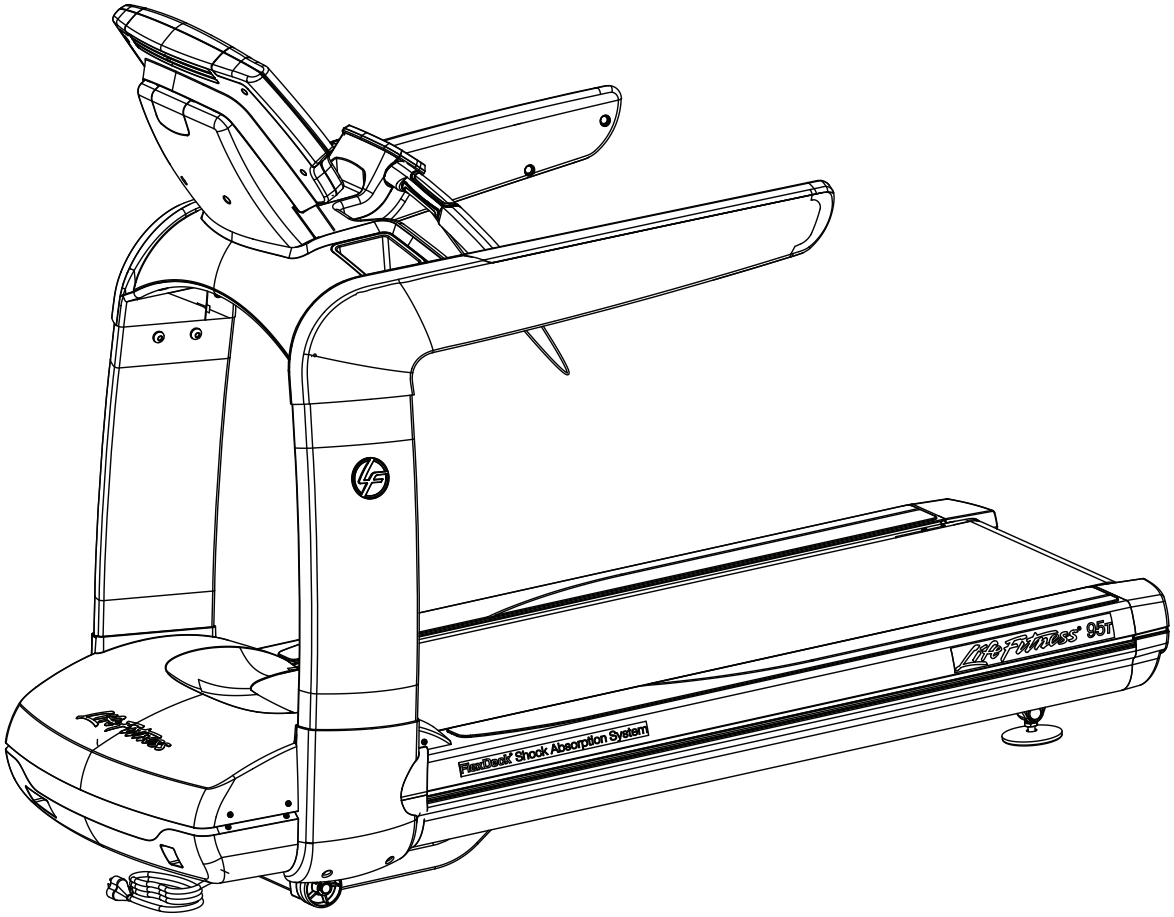

Customer Support Services

PARTS MANUAL

rev 23 Feb 2010

Miscellaneous 3
Rear End Caps 4
Anti-slip Pad and Extrusions 5
Console Assembly 6
Uprights and Covers 7
Bridge Covers and Activity Zone 8
Handrails and Covers 9
Console Bracket and Covers 10
Ergo Bar Components 11
Motor Pan Covers 12
Motor Pan Brackets 13
Belt, Deck, and Rollers 14
Deck Springs, Stride Sensor, and Roller Guards 15
Lift Motor and Hardware 16
Lift Frame and Wheels 17
DSP Motor Controller and Comm Port Plate Assembly 18
On/Off Switch, Home Switch, and Line Filter 19
Drive Motor Assembly 20
Idler Assembly and Drive Belt 21
Leg Leveler Assembly 22
Cables 23

Description	Part No.
CD: OPERATION MANUAL / ASSEMBLY INSTRUCTIONS	AK65-00097-0003
HARDWARE BOX	AK65-00120-0002
BOX CONSISTS OF:	
SCREW – 8-18x12	0017-00101-1769 – 2 PCS.
SCREW – M6x1.00-6G6Gx20	0017-00101-1902 – 3 PCS.
SCREW – M6x1.00-6G6Gx35	0017-00101-1954 - 2 PCS.
SCREW – M12x1.75-6G6Gx30	0017-00101-1984 – 12 PCS.
SCREW – M6x1.00-6G6Gx14	0017-00101-1953 – 46 PCS.
SCREW – 10-16X8	0017-00101-1776 – 8 PCS.
SCREW – M3x.8-6G6Gx10	0017-00101-1995 – 4 PCS.
WASHER – M006.50	0017-00104-0488 – 11 PCS.
WASHER – M012.70	0017-00104-0489 – 12 PCS.
TOUCH UP PAINT:	
SPRAY CAN	0017-00008-0204
.5 OZ BOTTLE W/APPLICATOR	0017-00008-0205
.33 OZ PEN	0017-00008-0206
LINE CORDS:	
Domestic Low Voltage	0017-00003-0980
Domestic High Voltage	0017-00003-0781
International High Voltage (Cont.)	0017-00003-0696
UK*	0017-00003-0890
Australia*	0017-00003-0996
China*	0017-00003-1014
Line cord Bracket	0K65-01297-0000
SCREW – M4x0.7-6G6Gx10	0017-00101-1968 – 2 PCS.

This treadmill has both Lifepulse hand sensors and telemetry and is pre-wired for attachable TV.

* The UK, Australia, and Chinese line cords are included in the 95T-INTHX-03 ship kit.

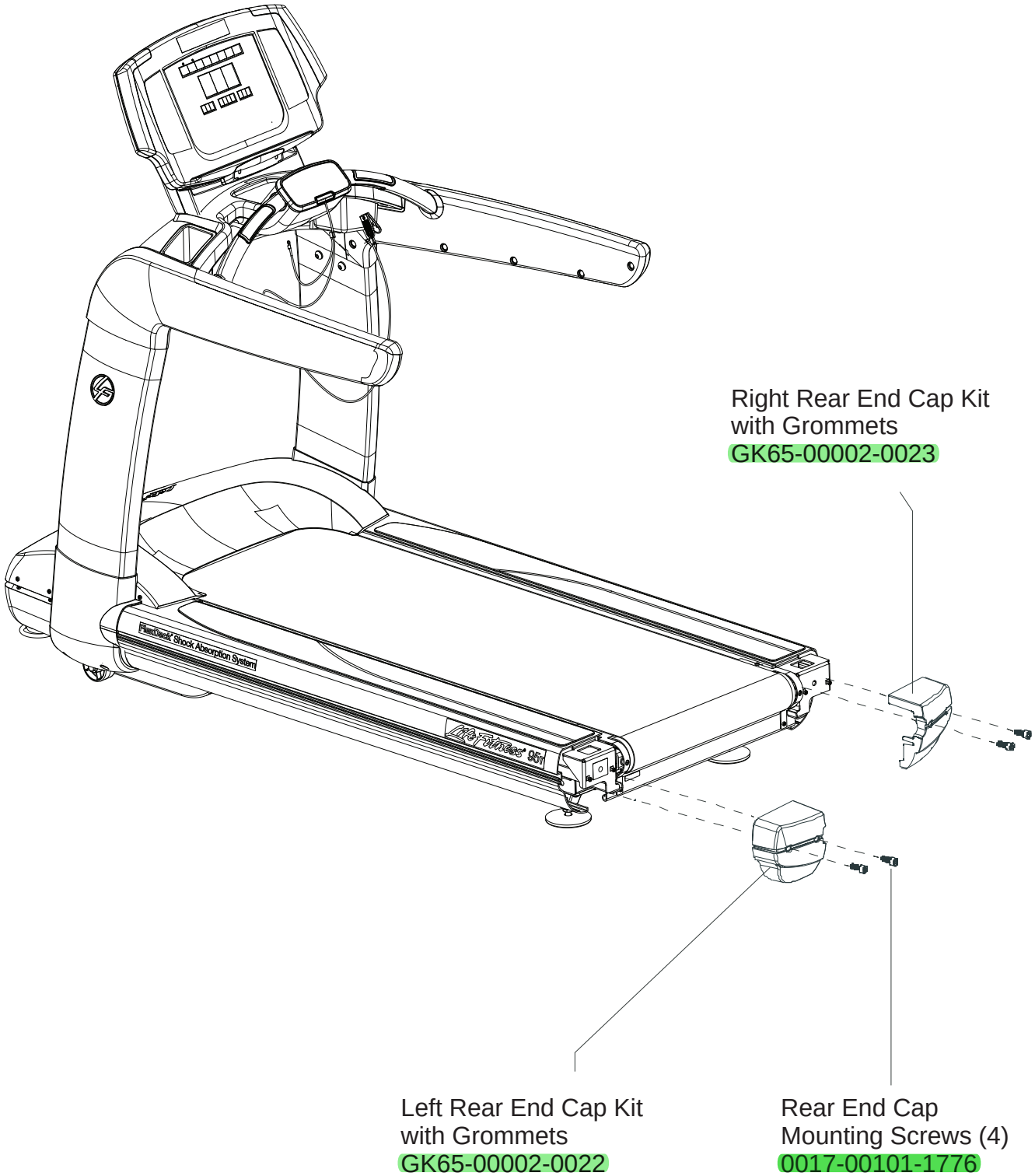
Right Rear End Cap Kit
with Grommets
GK65-00002-0023
Left Rear End Cap Kit
with Grommets
GK65-00002-0022
Rear End Cap
Mounting Screws (4)
0017-00101-1776

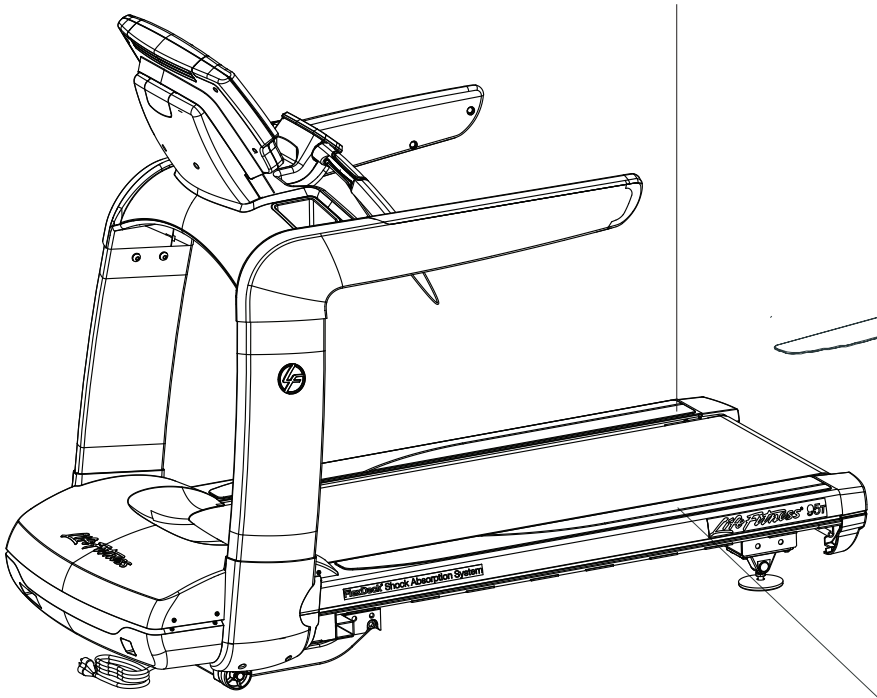

Right Anti-Slip Pad
0K65-01190-0001

Left Anti-Slip Pad
0K65-01190-0002

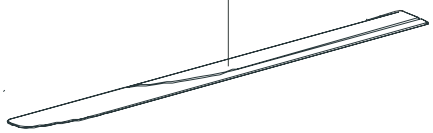

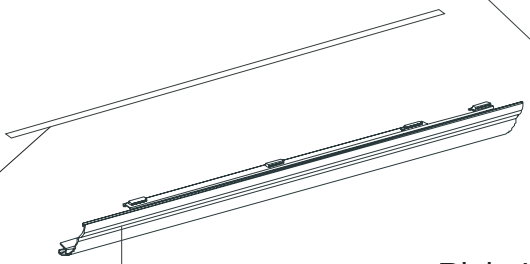

Right Upper Extrusion / Anti-Slip Pad Kit
GK65-00002-0003

Left Upper Extrusion / Anti-Slip Pad Kit
GK65-00002-0004

Lower Extrusion Spacer (1 per side)
0K65-01259-0000

RH Lower Frame Extrusion Assembly
AK65-00093-0003

LH Lower Frame Extrusion Assembly
AK65-00093-0004
(Assemblies Include Dual-Lock Tape)

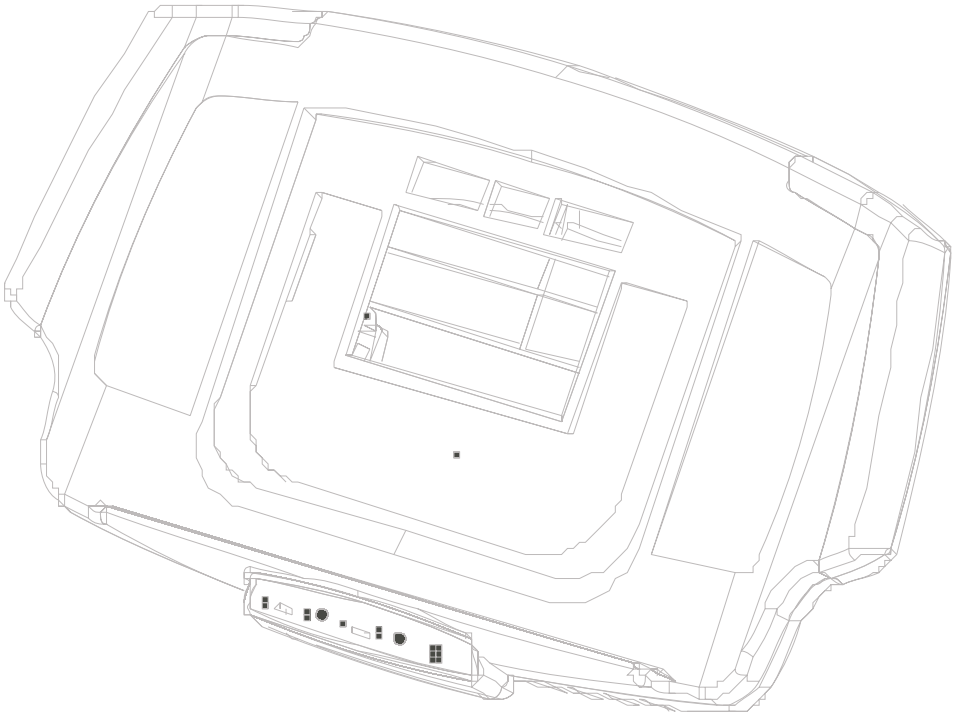

Description	Part No.
LED TREADMILL CONSOLE - ENGLISH	LEDT-DOMXX-01
LED TREADMILL CONSOLE - INTERNATIONAL	LEDT-INTXX-01
LED TREADMILL CONSOLE - IFI	LEDT-IFIXX-01
7-INCH LCD TREADMILL CONSOLE DOM	07DT-DOMXX-01
7-INCH LCD TREADMILL CONSOLE INT	07DT-INTXX-01
15-INCH LCD TREADMILL CONSOLE DOM NTSC	15DT-DOMXN-01
15-INCH LCD TREADMILL CONSOLE NTSC	15DT-INTXN-01
15-INCH LCD TREADMILL CONSOLE PAL	15DT-INTXP-01

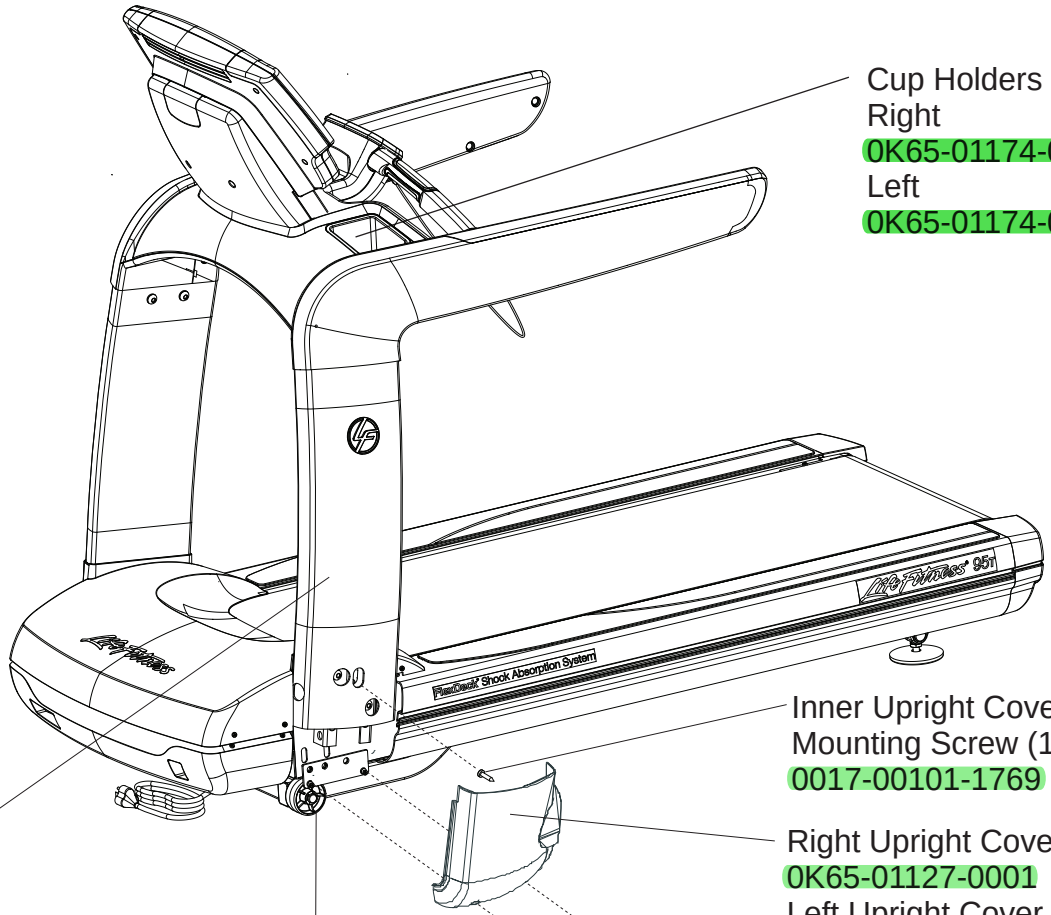

Cup Holders
Right
0K65-01174-0001
Left
0K65-01174-0002

Inner Upright Cover
Mounting Screw (1 per side)
0017-00101-1769

Right Upright Cover
0K65-01127-0001
Left Upright Cover
0K65-01127-0002

Right or Left Upright Assembly
GK65-00002-0010

Upright Mounting Bolts (3 per side)
0017-00101-1984

Washers (3 per side)
0017-00104-0489

Upright Cover Mounting Screws (2 per side)
0017-00101-1776

Plastic Grommets (2 per side)
0017-00042-0326

Top Bridge Cover
0K65-01051-0000

Bottom Bridge Cover Assembly
AK65-00086-0000

Included in Bridge Bottom Cover Assembly:

Bezel Access Door
0K65-01053-0000
0K65-01208-0000

Heart Rate Receiver
118E-00001-0244

Bottom Bridge Cover
0K65-01052-0000

Bridge Cover Mounting Screws (10)
0017-00101-1953

Activity Zone Assembly
AK65-00015-0000

IFI
AK65-00015-0001

Mounting Screws (2)
0017-00101-1954

Stop Switch and Tether Assembly
(included in the Activity Zone Assembly)
AK65-00037-0000
FOR IFI ONLY
AK65-00037-0001

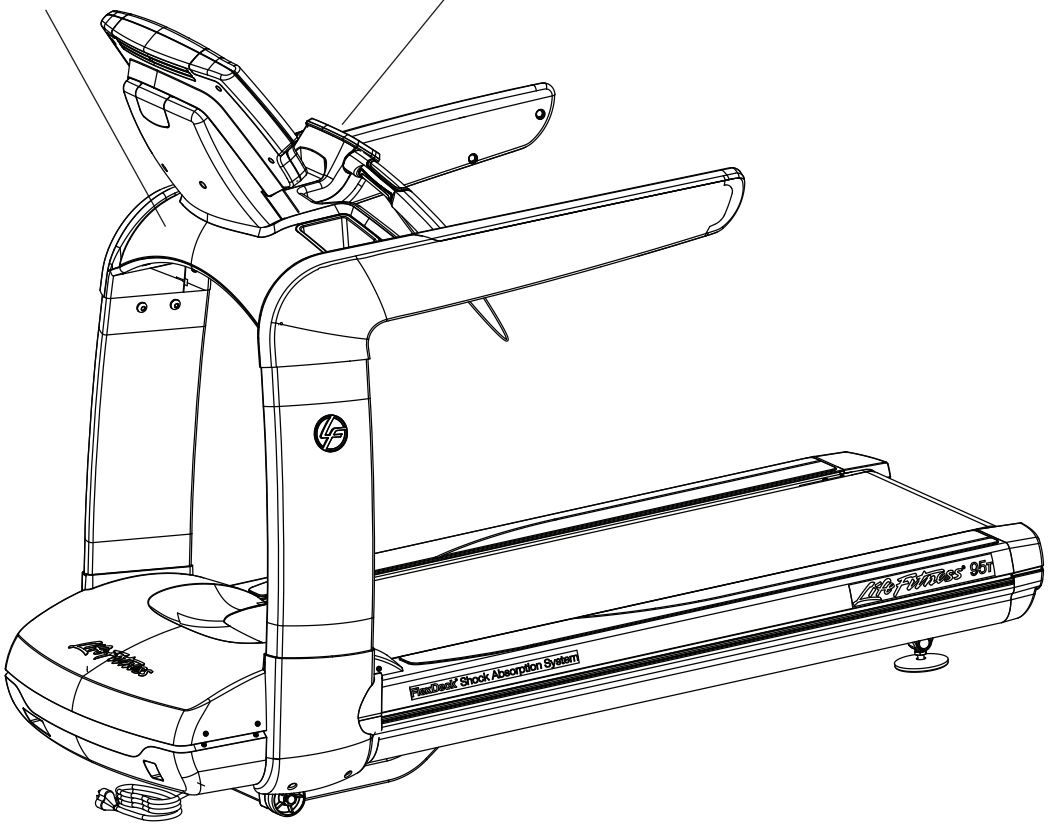

Right Handrail Assembly
AK65-00077-0001

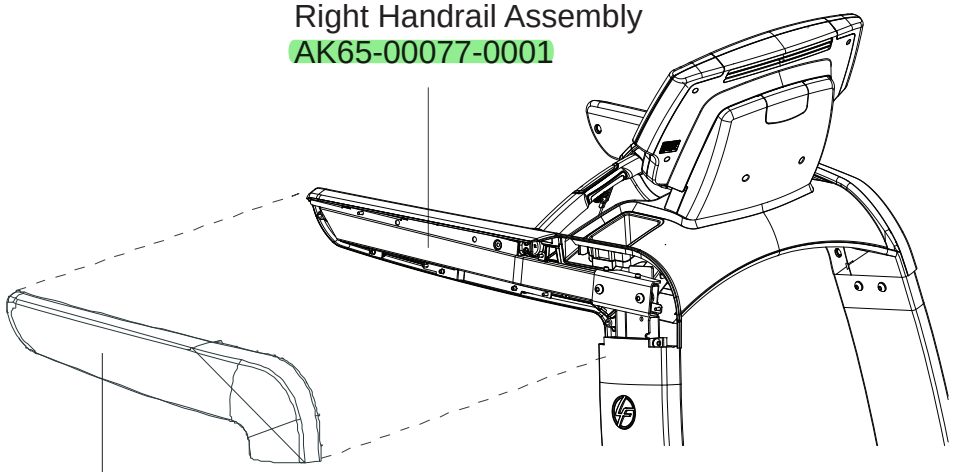

Right Outer Handrail Cover
0K65-01167-0001

Outer Handrail Mounting Screw (6 per cover)
0017-00101-1953

Left Handrail Assembly
AK65-00077-0002

Left Outer Handrail Cover
0K65-01167-0002

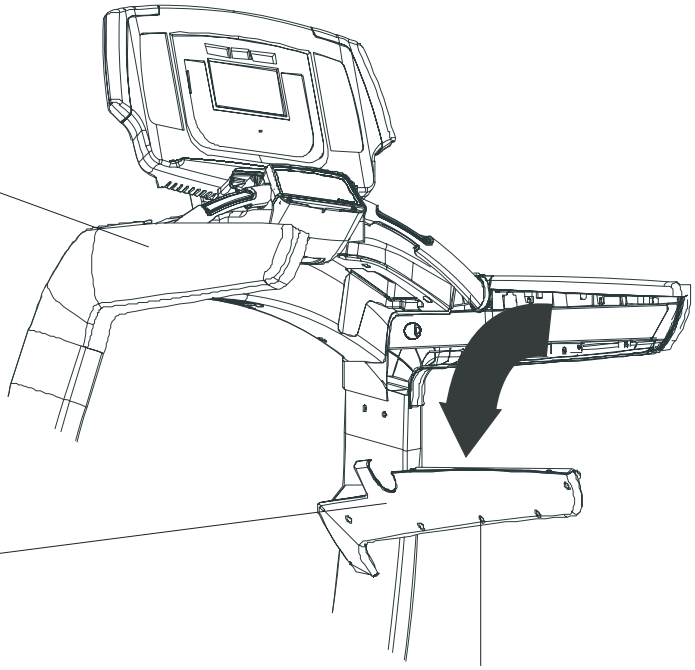

Right Inner Handrail Cover
0K65-01168-0001

Left Inner Handrail Cover
0K65-01168-0002

Inner Handrail Mounting Screw (5 per cover)
0017-00101-1953

Inner Handrail Plug
0K65-01225-0000

Bag of 10 Plugs
AK65-00101-0000

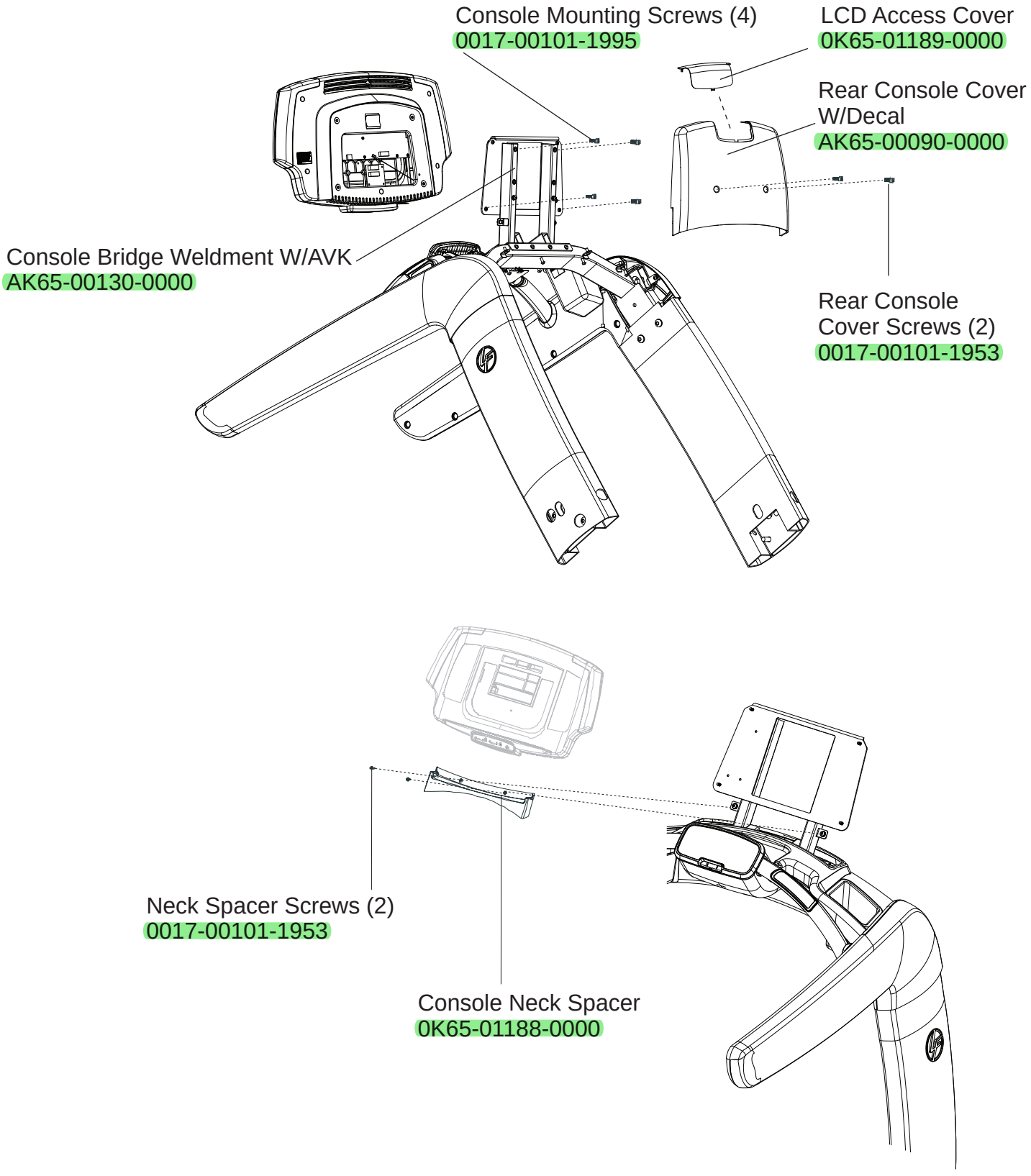
Console Mounting Screws (4)
0017-00101-1995
LCD Access Cover
0K65-01189-0000
Rear Console Cover W/Decal
AK65-00090-0000
Console Bridge Weldment W/AVK
AK65-00130-0000
Rear Console Cover Screws (2)
0017-00101-1953
Neck Spacer Screws (2)
0017-00101-1953
Console Neck Spacer
0K65-01188-0000

HR Sensor Kit: GK65-00002-0002
(kit includes 4 sensors, sensor gasket, mounting screws)

Bridge Weldment
AK65-00129-0000

Bridge Weldment Mounting Screws (6)
0017-00101-1984

Inner Ergo Bar Gasket (right)
0K65-01204-0001

Inner Ergo Bar Gasket (left)
0K65-01204-0002

Ergo Bar Assembly
(includes HR sensors kit and inner Ergo Bar Gaskets)
AK65-00014-0000

Mounting Screws (4)
0017-00101-1954

Flat Washers (4)
0017-00104-0488

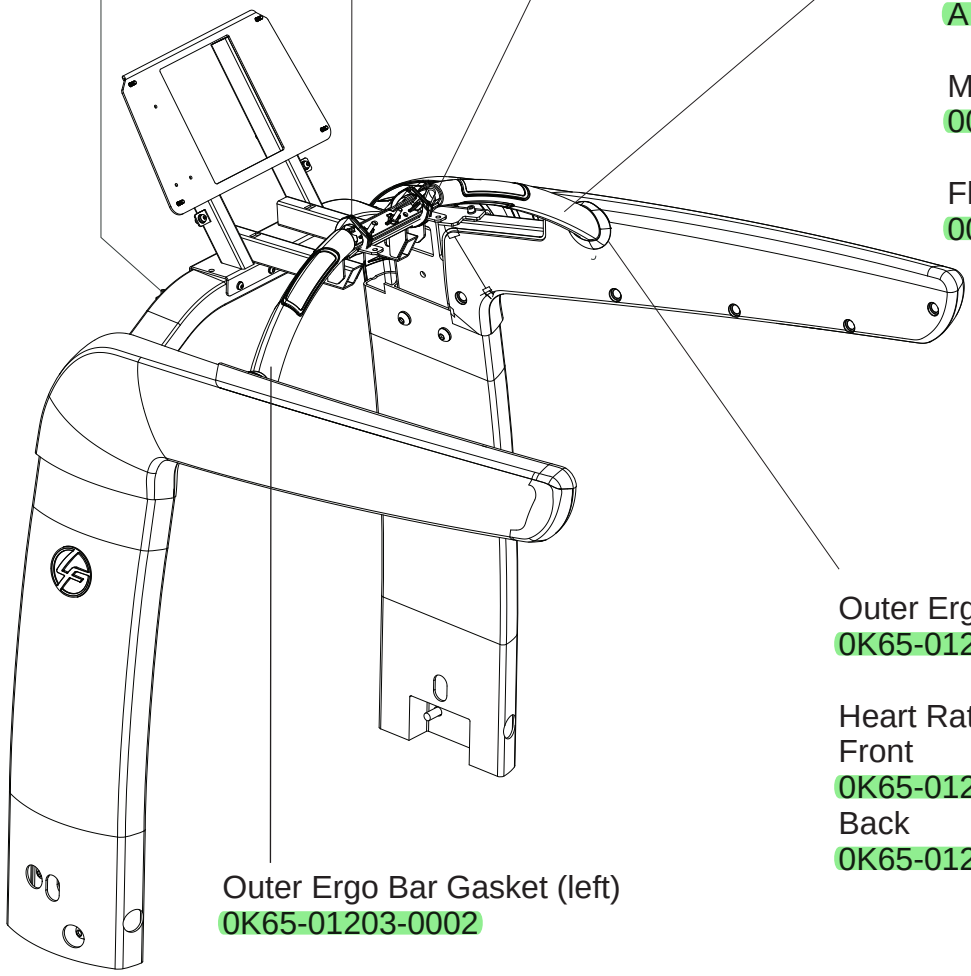

Outer Ergo Bar Gasket (right)
0K65-01203-0001

Heart Rate Electrodes Gaskets
Front
0K65-01270-0000
Back
0K65-01269-0000

Outer Ergo Bar Gasket (left)
0K65-01203-0002

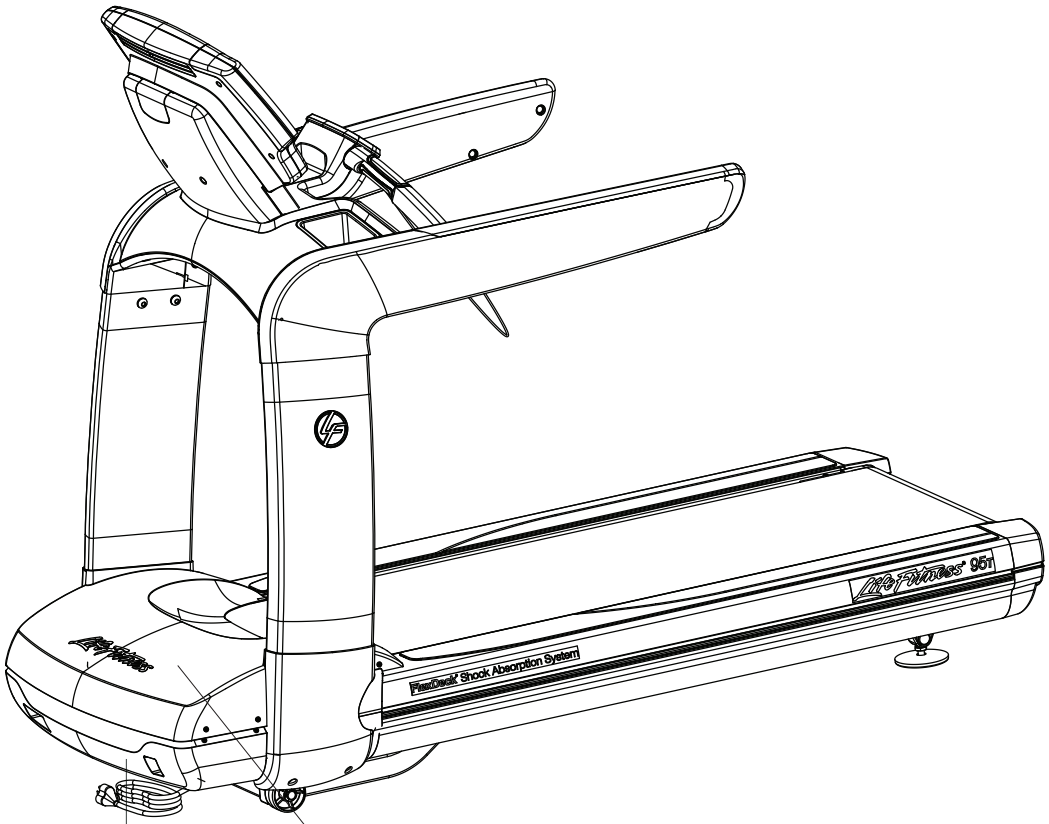

Bottom Motor Cover
0K65-01126-0001

Motor Cover Screws (4)
0017-00101-1776

Top Motor Cover
0K65-01125-0000

Motor Cover Screws (6)
0017-00101-1776

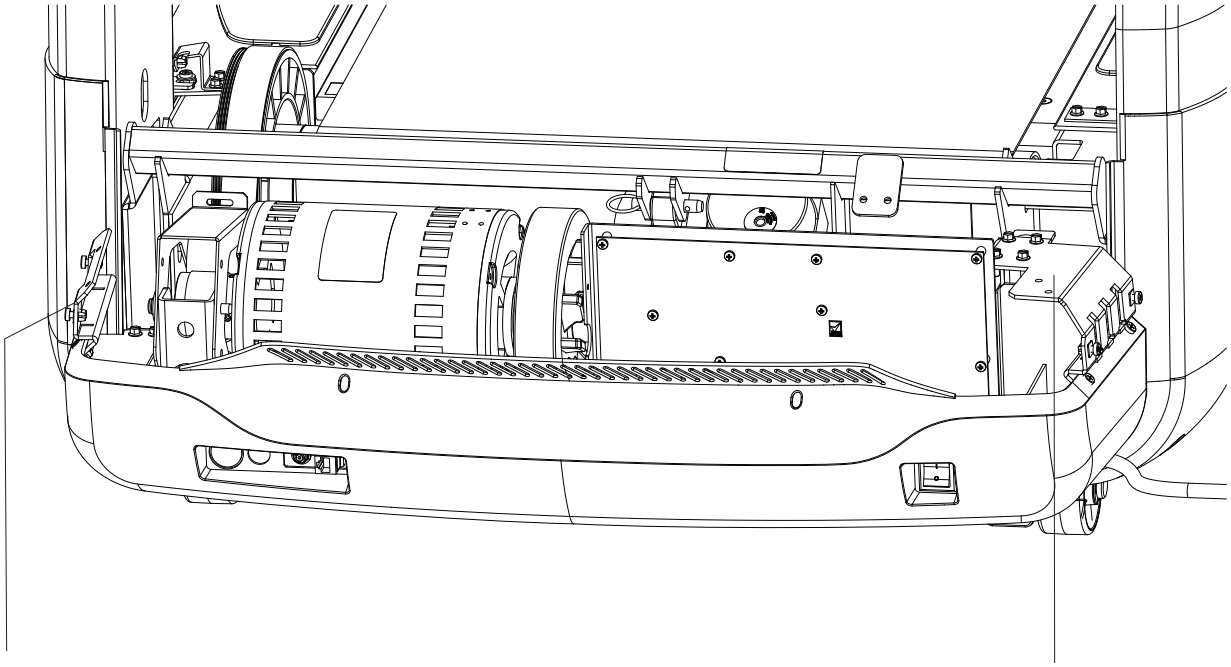

Right Front Motor Cover Bracket
0K65-01134-0001

Mounting Screws (3)
0017-00101-1961

Nylon Screw Grommet (4)
0017-00042-1147

Left Front Motor Cover Bracket
0K65-01134-0002

Mounting Screws (4)
0017-00101-1961

Nylon Screw Grommet (4)
0017-00042-1147

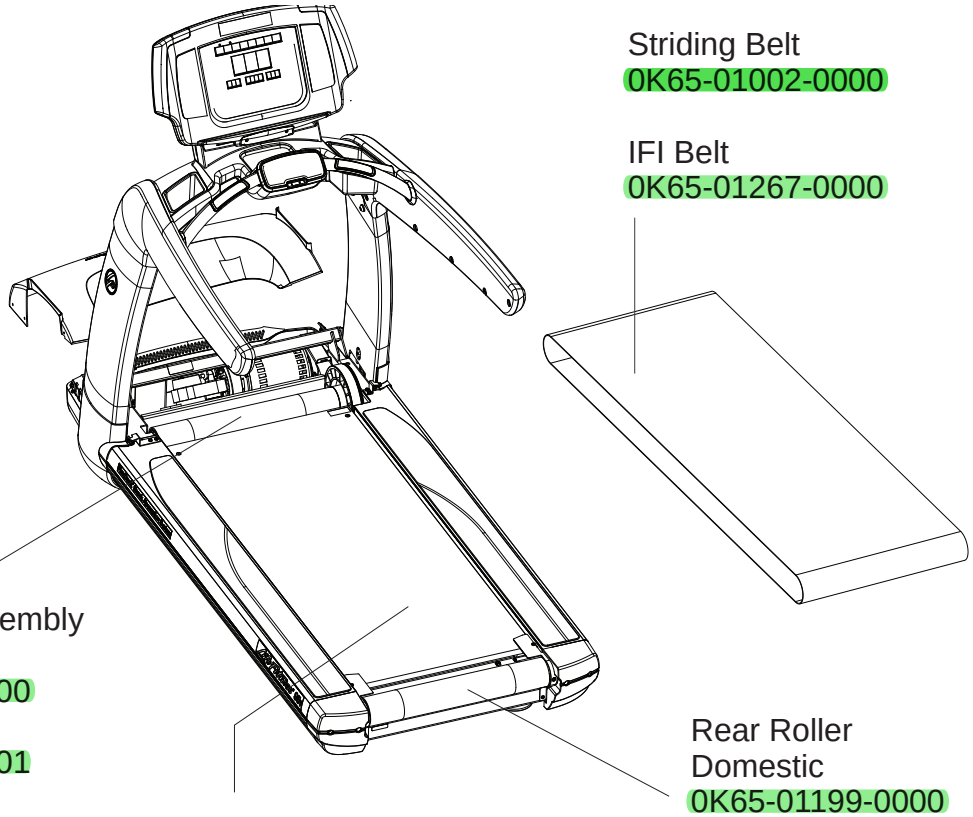

Striding Belt
0K65-01002-0000

IFI Belt
0K65-01267-0000

Front Roller Assembly
Domestic
AK65-00067-0000
International
AK65-00067-0001

Mounting Bolt
0017-00101-0974

Lock Washer
0017-00104-0006

Flat Washer
0017-00104-0043

Deck
0K65-01263-0000

Deck Screws (4)
0017-00101-1775

Tinnerman Clips (4)
0017-00103-0198

Rear Roller
Domestic
0K65-01199-0000
International
0K65-01199-0001

Rear Roller Tension Bolts (2)
0017-00101-1880

Flat Washers (2)
0017-00104-0334

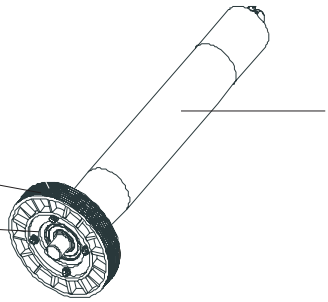

Drive Pulley
0K58-01105-0000

Hex Bolts (4)
0017-00101-1632

Lock Washers (4)
0017-00104-0005

Flat Washers (4)
0017-00104-0330

Front Roller
Domestic
0K65-01195-0000
International
0K65-01195-0001

Snap Bushing
0017-00042-1180

Stride Sensor Assembly
AK58-00560-0000

Deck Springs (4 on each side)
0K40-01026-0002

Spring Mounting Screw
0017-00101-1652

Flat Washer
0017-00104-0072

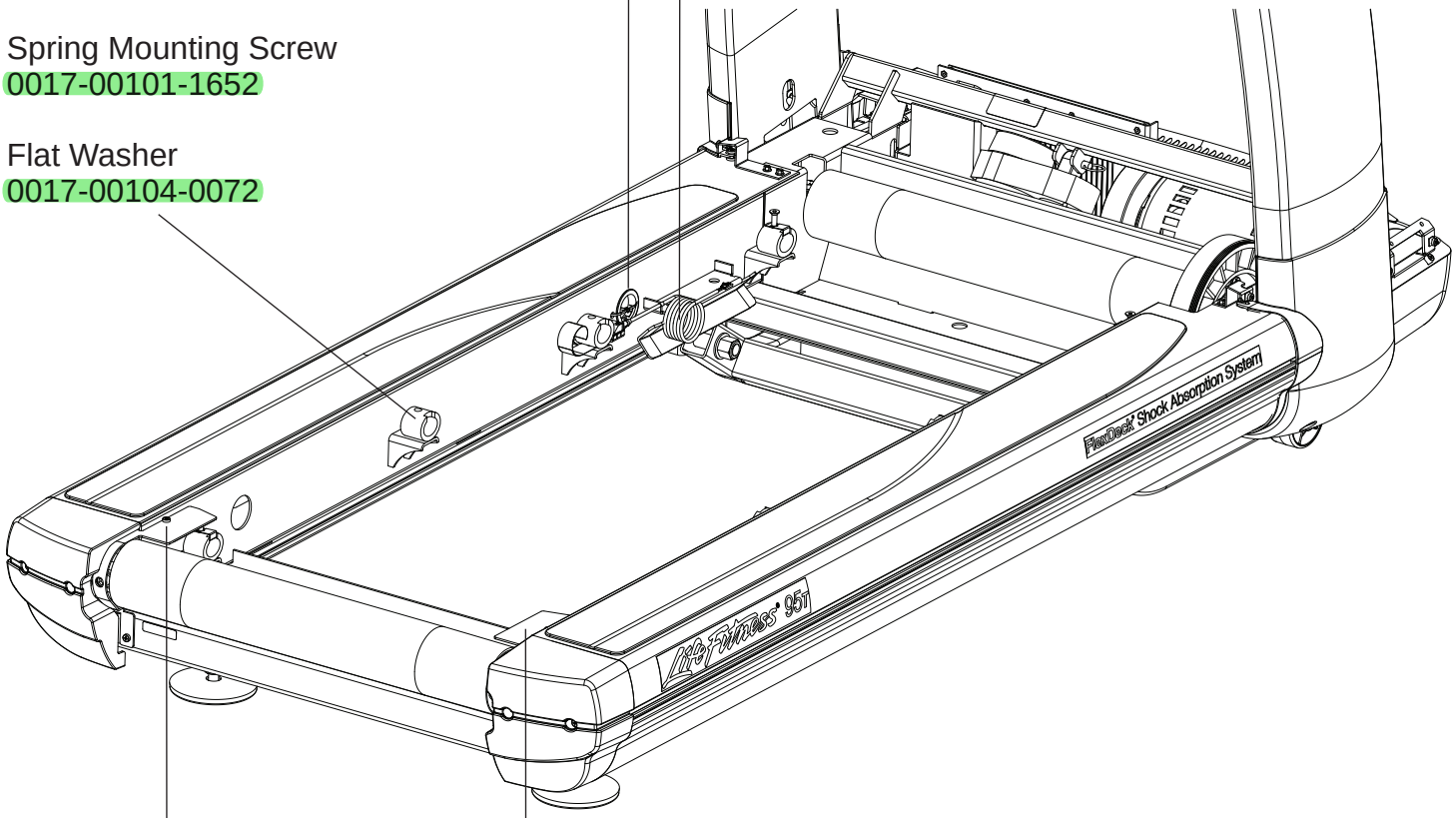

Roller Guard Left
AK65-00092-0002

Grommet (2 per side)
0017-00042-1147

Screw (2 per side)
0017-00101-1776

Roller Guard Right
AK65-00092-0001

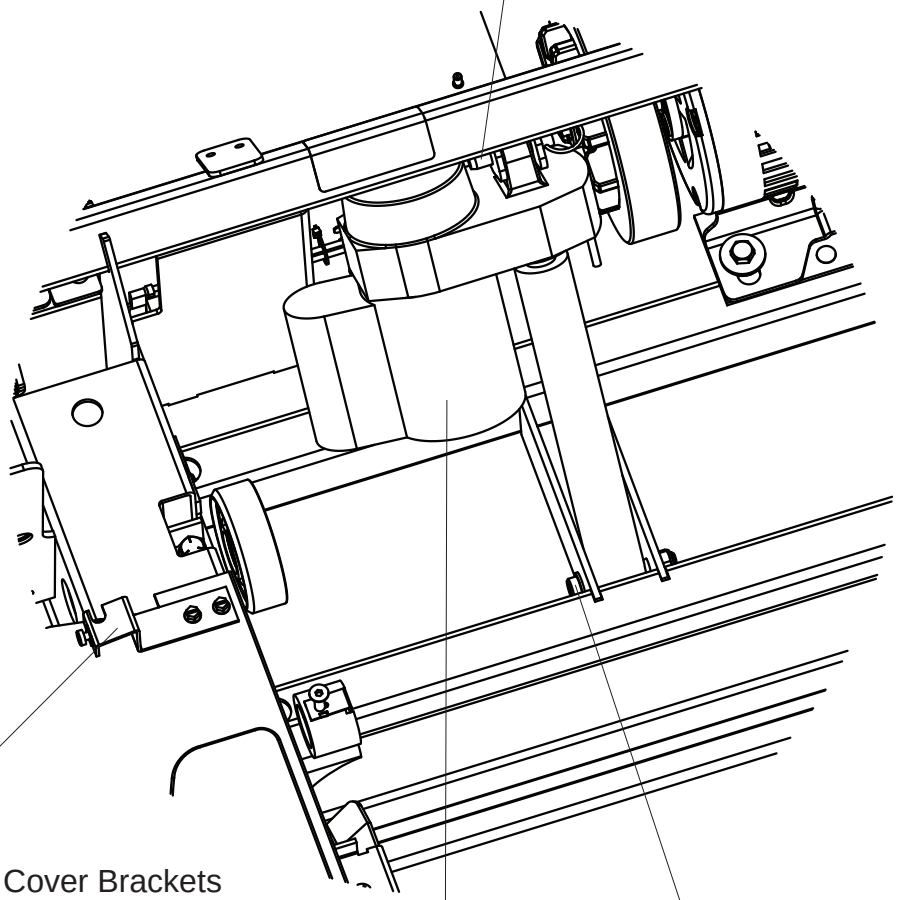

Ring Grip Pin
0017-00007-0275

Rear Motor Cover Brackets
Right (Not Shown)
0K65-01135-0001
Left
0K65-01135-0002

Nylon Screw Grommet
0017-00042-1147

Mounting Screws
0017-00101-1961

Lift Actuators
115V
0K65-01192-0001
230V
0K65-01192-0002

Bolt
0017-00101-2038

Nut
0017-00103-0027

Washer (2)
0017-00104-0043

Lift Frame Assembly
AK65-00150-0000
(includes lift frame, wheels, snap rings, end caps)

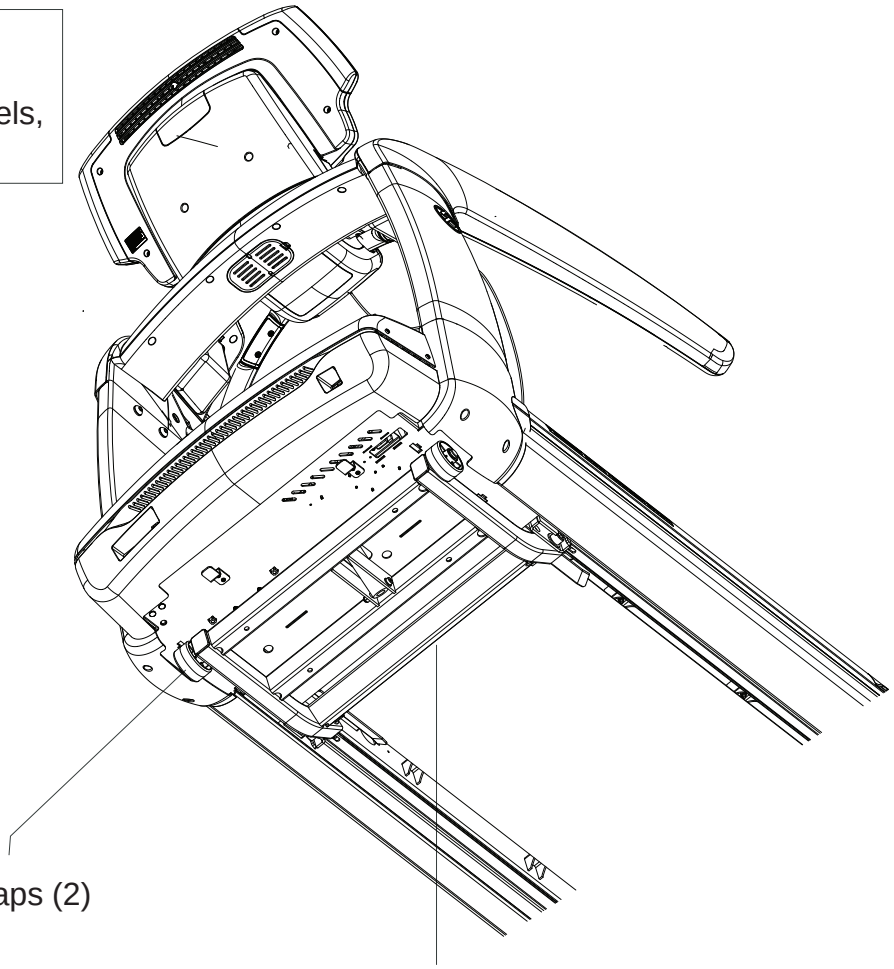

Tube End Caps (2)
7352201

Lift Wheels (2)
0K65-01245-0000

Snap-Rings (2)
0017-00100-0249

Painted Lift Frame Weldment
AK65-00137-0000

Lift Frame Mounting Bolts (2)
0017-00101-1777

Lift Frame Mounting Nuts (2)
0017-00103-0285

Washers (2)
0017-00104-0259

Sleeve Bushings (2)
0K58-01089-0000

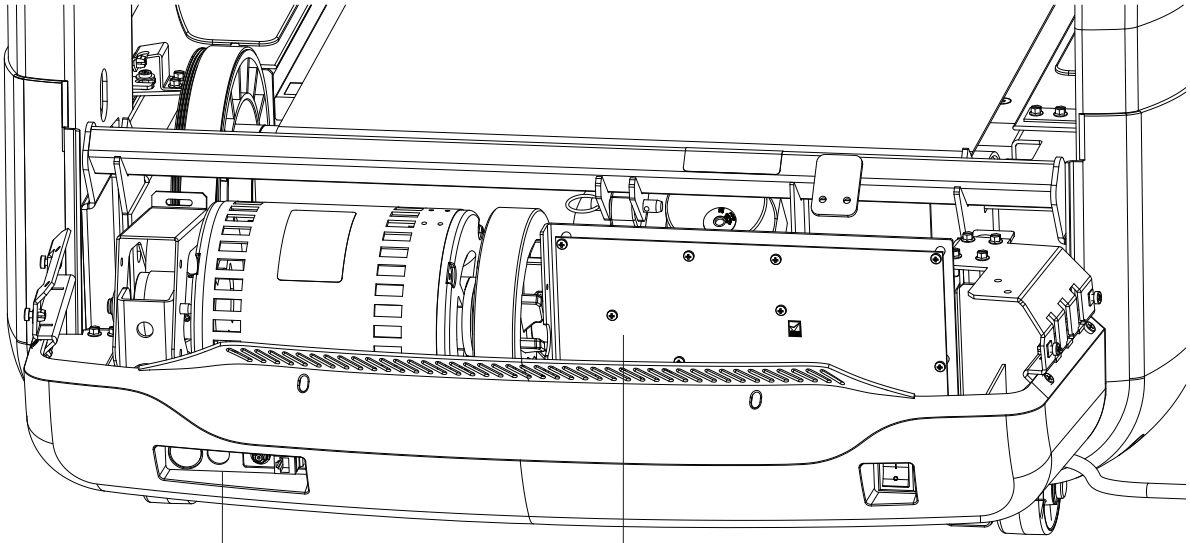

Comm Port Plate Assembly
AK65-00082-0000
includes one of each:
F-type Right Angle Adaptor
0017-00021-2810
F-type Panel Connector
0017-00021-2846
Phone Jack Panel Receptacle
0017-00021-2847

DSP Motor Controller With Cable
GK65-00002-0005 100-120V
GK65-00002-0006 200-240V

Hex Nut (3)
0017-00103-0350

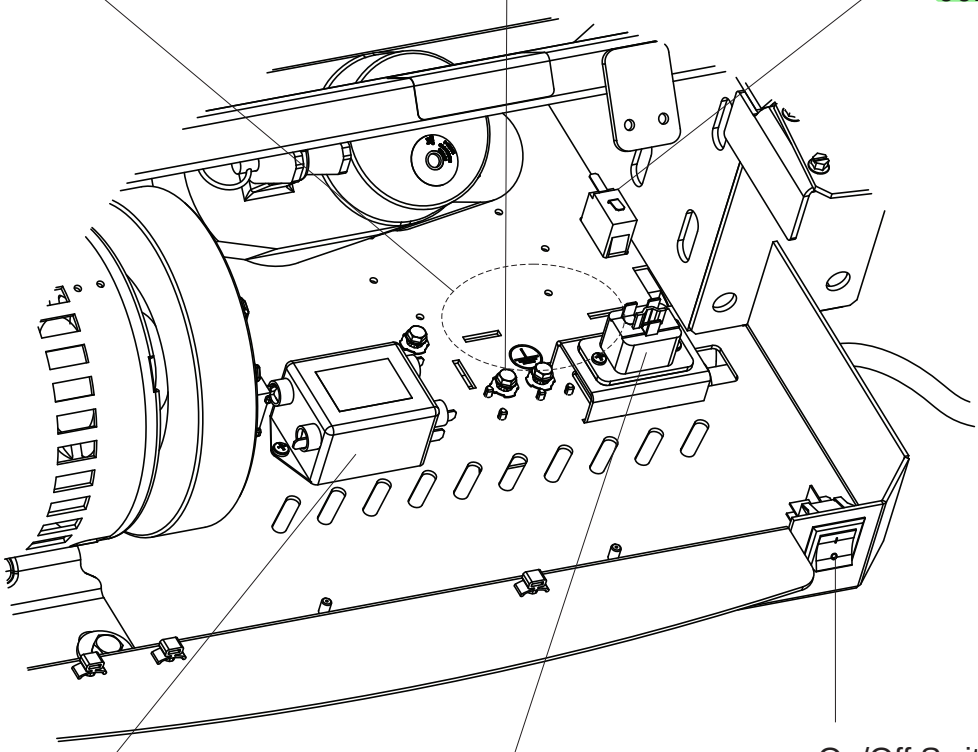
Ground Screws (3)
0017-00101-0883
Note:
Stiffener plate removed for clarity
Home Switch
0017-00032-0195
On/Off Switch
0017-00032-0198
20 amp Line Filter (DOM)
0017-00003-1015
10 amp Line Filter (INT)
0017-00003-0898
Line Filter Mounting Screws (2)
0017-00101-1968
IEC Receptacle
0017-00003-0949
IEC Receptacle Mounting Screws (2)
0017-00101-1969

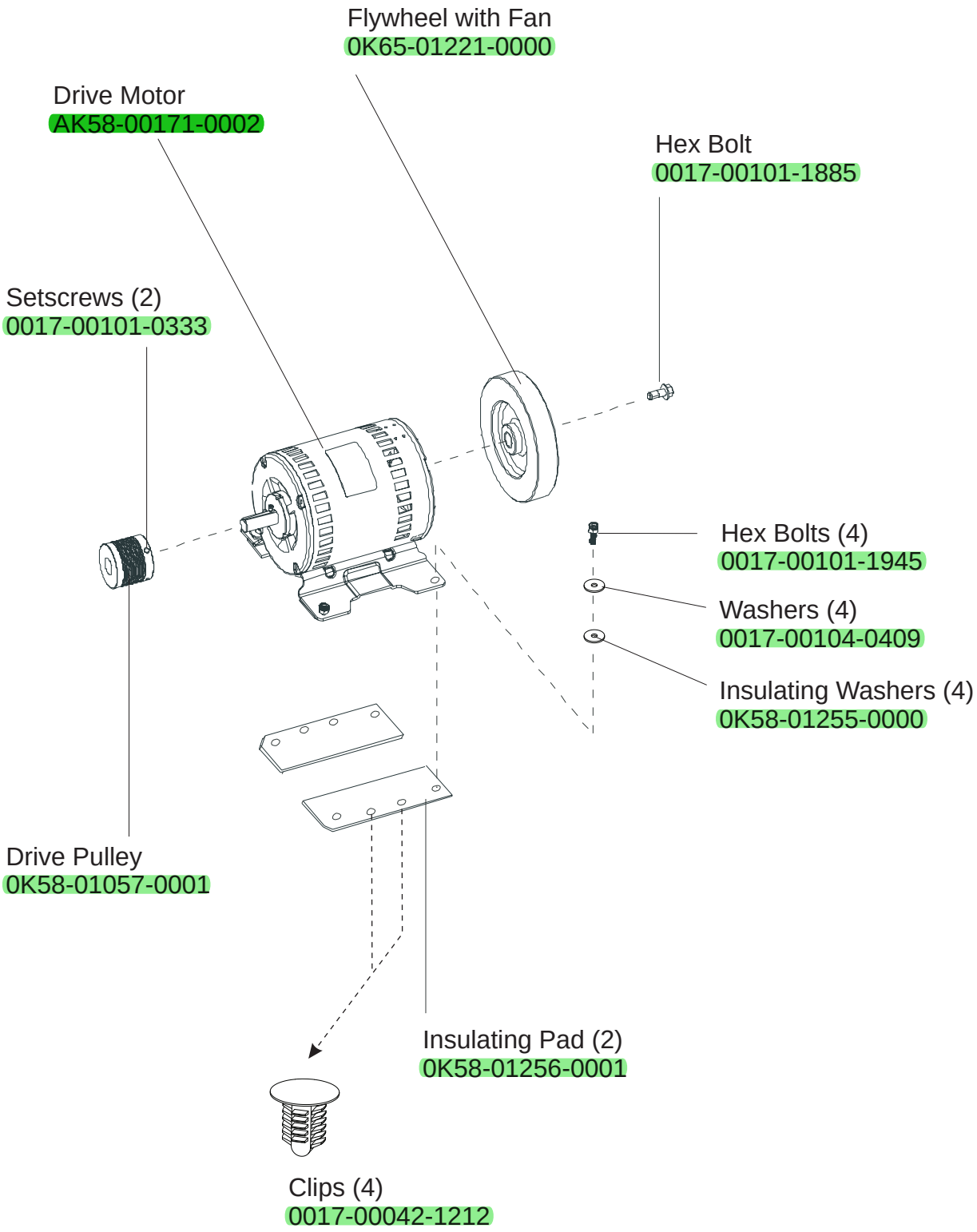
Flywheel with Fan
0K65-01221-0000
Drive Motor
AK58-00171-0002
Hex Bolt
0017-00101-1885
Setscrews (2)
0017-00101-0333
Hex Bolts (4)
0017-00101-1945
Washers (4)
0017-00104-0409
Insulating Washers (4)
0K58-01255-0000
Drive Pulley
0K58-01057-0001
Insulating Pad (2)
0K58-01256-0001
Clips (4)
0017-00042-1212

Idler Assembly
AK65-00029-0000
(includes idler bracket plastic idler, threaded shaft, nut)

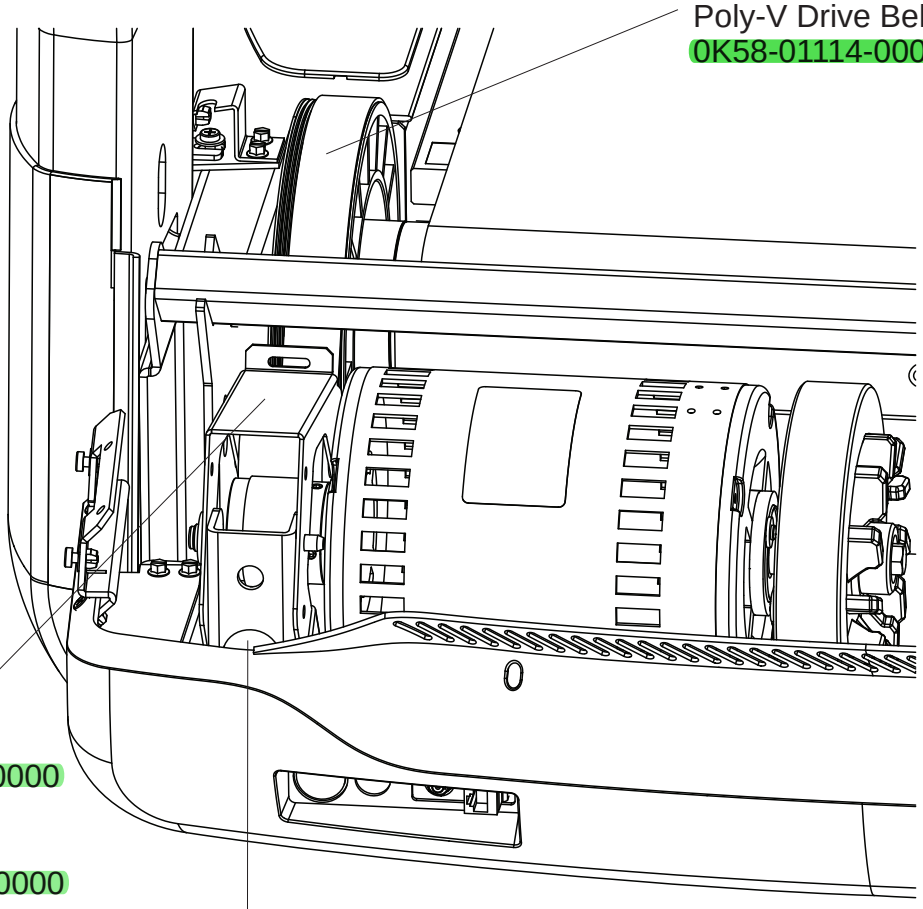

Poly-V Drive Belt
0K58-01114-0000

Idler Bracket
0K65-01113-0000

Plastic Idler
0K26-01731-0000

Threaded Shaft
0K58-01084-0002

Nut
0017-00103-0324

Locking Pin
0017-00007-0248

Mounting Nuts (4)
0017-00103-0333

Extension Spring
0K58-01085-0000

Spring Damper
0K26-02055-0000

Leg Leveler Assembly
AK58-00370-0000
(includes leveler bracket pivot pin, stop nut, leveling foot)

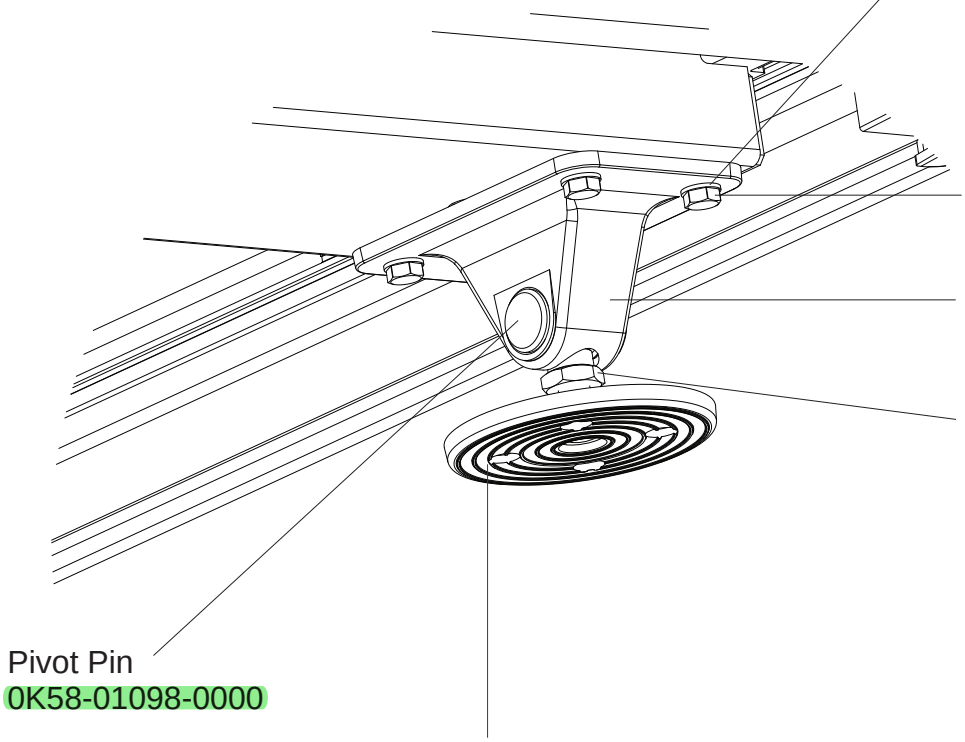

Washers (4 per side)
0017-00104-0469

Hex Bolts (4 per side)
0017-00101-1945

Leveler Bracket
0K58-01083-0000

Stop Nut
0K58-01099-0000

Pivot Pin
0K58-01098-0000

Leveling Foot
0K58-01110-0000

Description	Quantity	Part No.
Green and yellow ground wire with spade lug on one end and ring terminal on the other; one goes from the IEC connector to the frame, the other from the line filter to the frame	2	AK26-00348-0000
External power cable with ferrite	1	AK32-00160-0000
75-inch RG6 coax cable	1	AK65-00062-0000
Main power cable from DSP to console	1	AK58-00034-0001
Mov filter cable with a two-pin connector on one end and a terminal on the other end of one green wire; it also has two spade lugs at the end of a varistor spliced to the other green wire	1	AK58-00224-0001
Hi-pot jumper cable has a two-pin connector with a green wire looped between the pins.	1	AK58-00263-0000
Cable from MIB in console to Activity Zone	1	AK65-00043-0001
Heart rate Ergo bar cable	1	AK65-00047-0000
20-inch C-SAFE cable; from splitter to console	1	AK65-00051-0000
65-inch C-SAFE upright cable; runs from the base to the splitter in the bridge assembly	1	AK65-00051-0001
Cable from on/off switch to motor controller (domestic)	1	AK65-00073-0000
Cable from on/off switch to motor controller (international)	1	AK65-00073-0001
Cable assembly; power DSP, high voltage (international)	1	AK65-00073-0002
Home switch cable from home switch to motor controller	1	AK65-00074-0000
AC power cable with an IEC connector on one end and a ring terminal on the green/yellow wire; spade lugs on the brown and blue wires	1	AK65-00081-0000

Description	Quantity	Part No.
Black and white wires with spade lug on each end; from line filter to IEC connector	1	AK65-00094-0000
Line filter to switch cable with a black and white wire that has spade lugs on one end and flag-type spade lugs on the other	1	AK65-00095-0001
Harness Assembly 120/60 20A components: AK26-00348-0000 Outlet/Gnd Jumper Cable Assembly AK58-00224-0001 MOV Filter Cable Assembly AK58-00263-0000 Hi Pot Jumper cable Assembly AK65-00081-0000 AC Power cable Assembly AK65-00094-0000 IEC to filter cable Assembly AK65-00095-0001 Filter to switch cable Assembly 0017-00003-1015 Line filter 20A	1	AK65-00011-0001
Harness Assembly 230/50 10A components: AK26-00348-0000 Outlet/Gnd Jumper Cable Assembly AK58-00224-0001 MOV Filter Cable Assembly AK58-00263-0000 Hi Pot Jumper cable Assembly AK65-00081-0000 AC Power cable Assembly AK65-00094-0000 IEC to filter cable Assembly AK65-00095-0001 Filter to switch cable Assembly 0017-00003-0898 Line filter 10A	1	AK65-00011-0002