LC-8500HR
EXERCISE BIKE

GE09-00033-XXXX

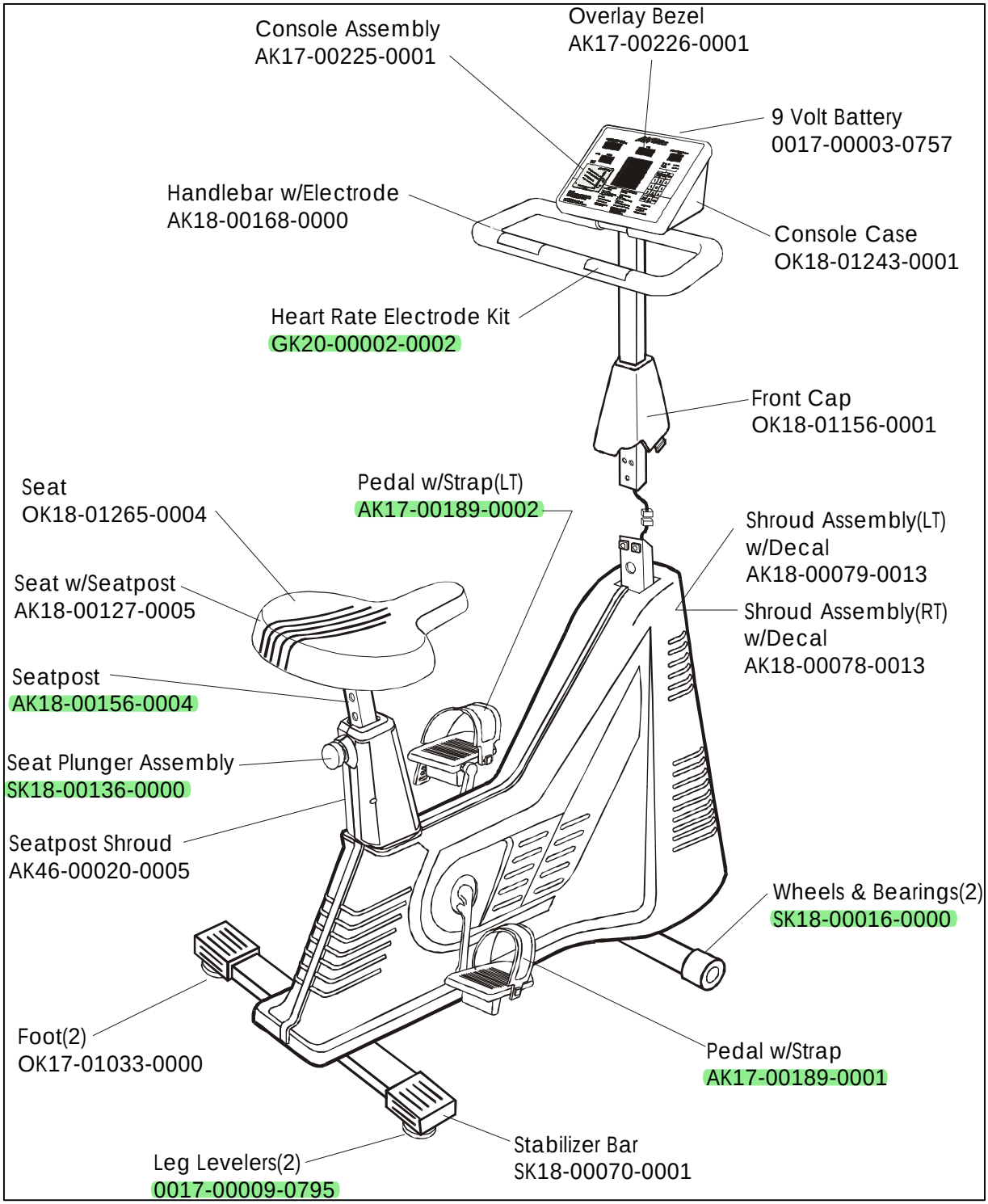

Revision Date: 11/12/98

LC-8500HR
EXERCISE BIKE

GE09-00033-XXXX

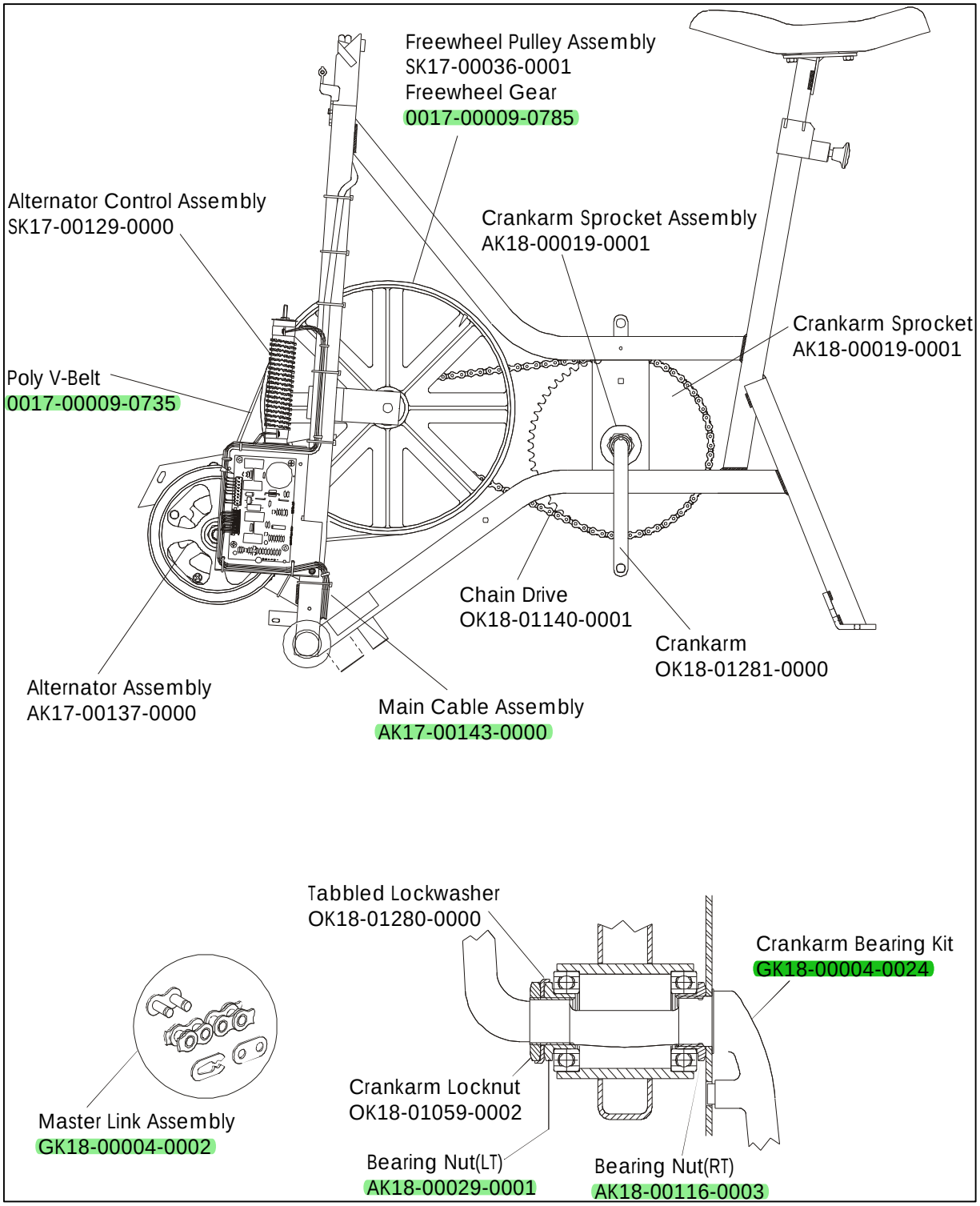

Revision Date: 11/12/98