CABLE MOTION SERIES
CMRW ROW

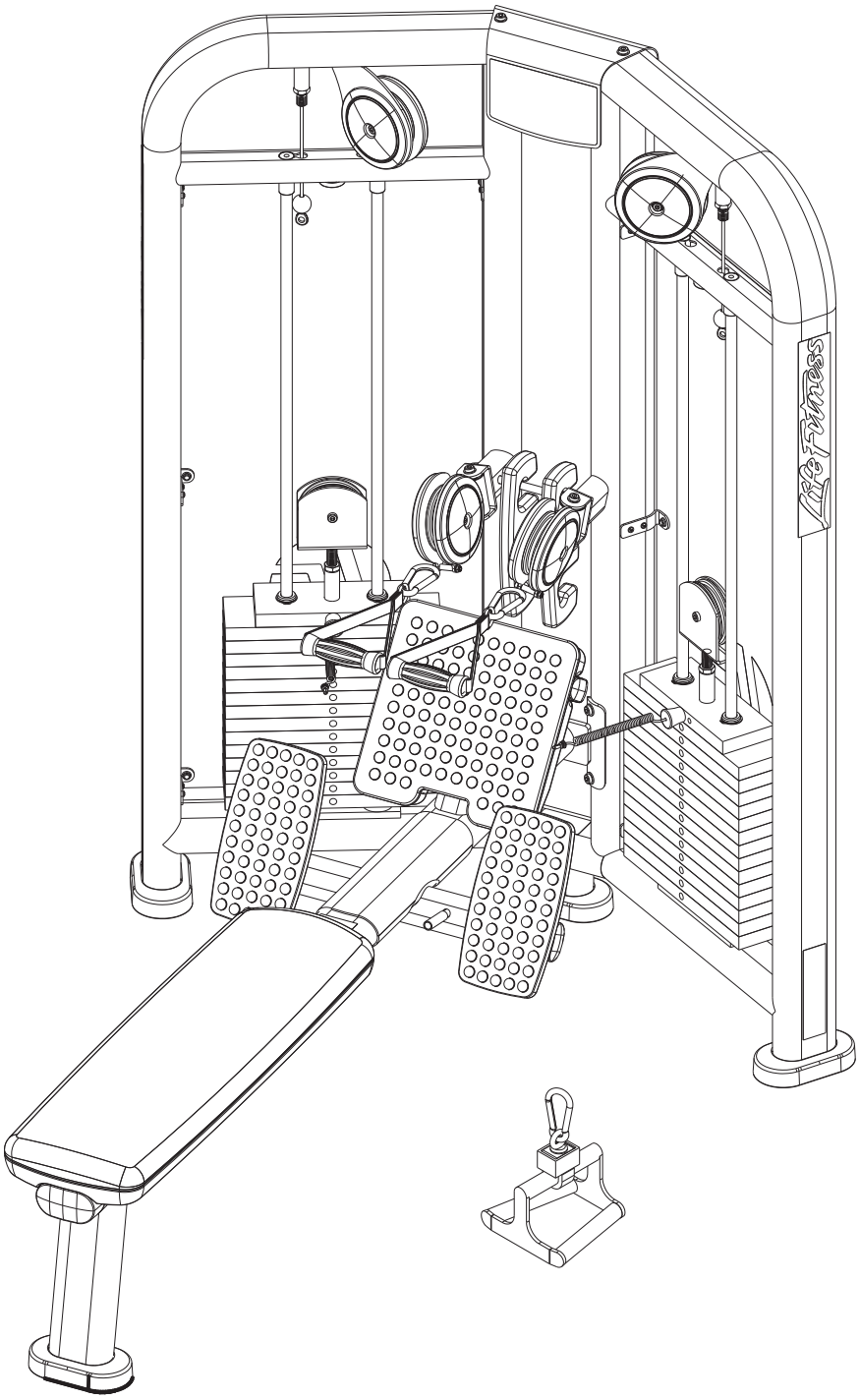

Customer Support Services

PARTS MANUAL

CMRW CABLE MOTION ROW
CONTENTS

	Page
COMPONENT ASSEMBLY	3
COMPONENT ASSEMBLY LEGEND	4
FRAME ASSEMBLY	5
FRAME ASSEMBLY LEGEND	6
BENCH ASSEMBLY	7
BENCH ASSEMBLY LEGEND	8
WEIGHT STACK ASSEMBLY	9
WEIGHT STACK ASSEMBLY LEGEND	10
IMAGE	11

CMRW CABLE MOTION ROW COMPONENT ASSEMBLY

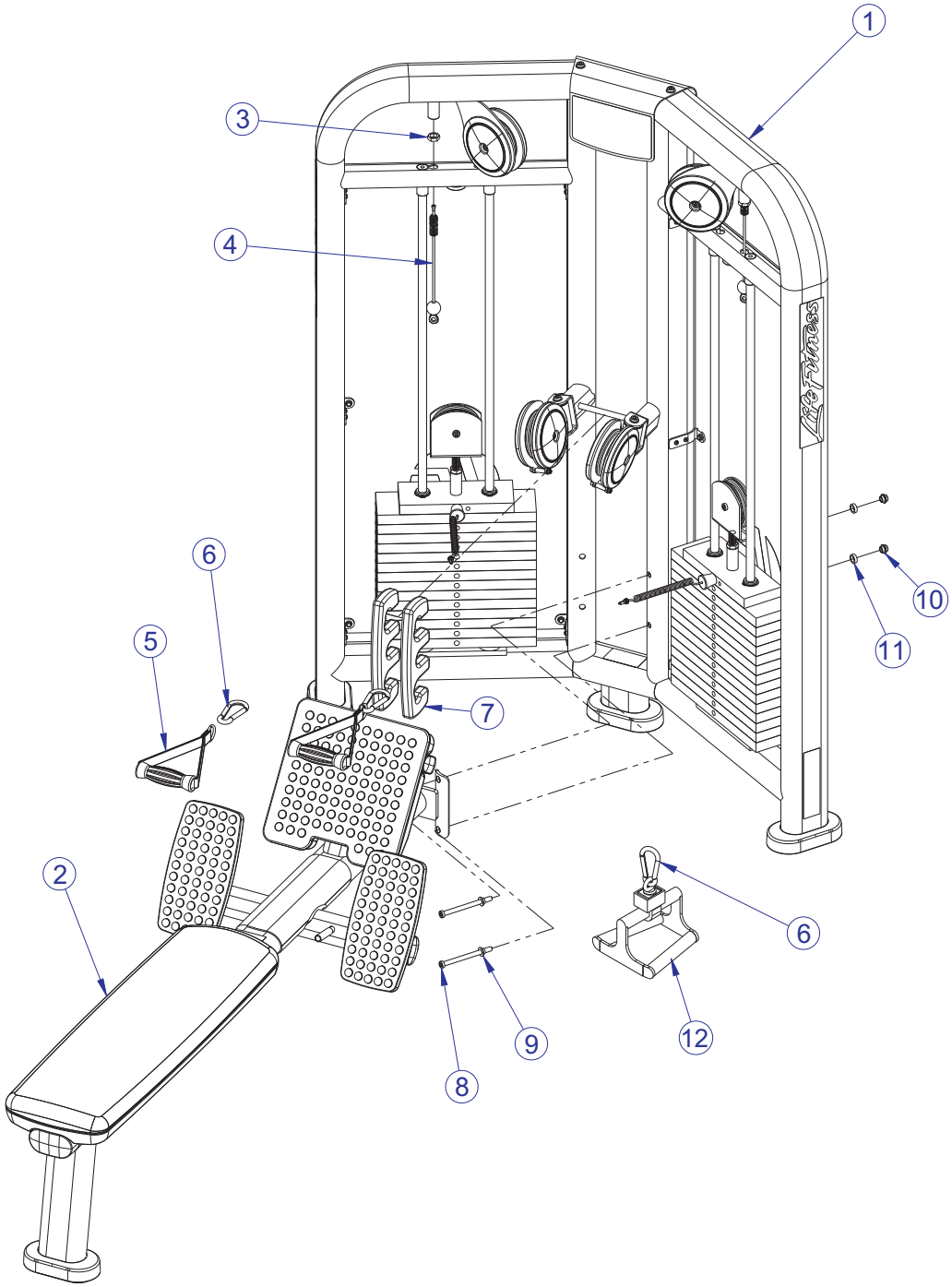

SEE PAGE 4 FOR LEGEND

CMRW CABLE MOTION ROW
COMPONENT ASSEMBLY LEGEND

ITEM NO.	QTY.	PART NO.	DESCRIPTION
1	1	7772901	ASSY, CMRW FRAME
2	1	7772801	ASSY, CMRW BENCH
3	2	3236902	NUT, M16 X 2 HEX JAM SS
4	2	7645706	CABEL CMRW
5	2	8219601	HANDLE, CM/MJ, SHORT STRAP
6	3	3250201	SNAP LINK, 3/8" DIA
7	2	7711501	WEIGHT, 5LB. ADD ON
8	4	3236220	SCREW, M10 X 105 130MM
9	4	7630101	RETAINER, CM/MJ, PULLEY
10	4	7335401	NUT, M10 X 1.5 SOCKET HEAD
11	4	7634701	SPACER, CM/MJ, .565 X .815
12	1	7732301	HANDLE, MJRW

CMRW CABLE MOTION ROW FRAME ASSEMBLY-7772901

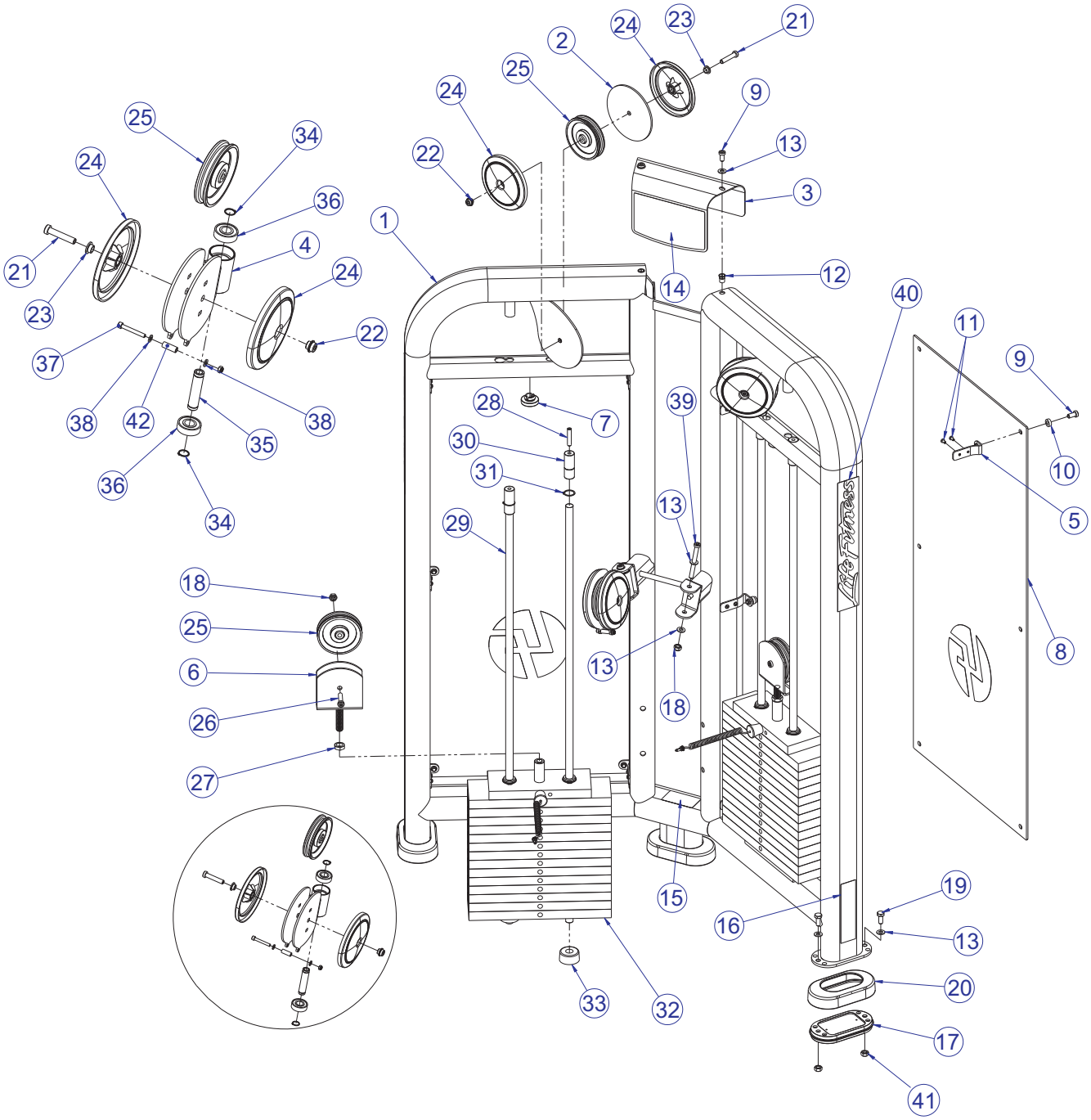

SEE PAGE 6 FOR LEGEND

CMRW CABLE MOTION ROW FRAME ASSEMBLY LEGEND

ITEM NO.	QTY.	PART NO.	DESCRIPTION
1	1	7769401	WLDMT, CMRW FRAME
2	2	7301101	PLATE, PULLEY
3	1	7770801	BRKT, CMPD/RW PLACARD
4	2	7770601	WLDMT, CMRW SWIVEL PULLEY W/SLOT
5	12	7642095	BRKT, CM/MJ, REAR SHROUD SG
6	2	7642295	WLDMT, CM/MJ STK PULLEY SG
7	2	7642301	BUMPER, CM/MJ, PLUG
8	2	7776102	SHIELD, CM REAR
9	14	3236201	SCREW, M10 X1.5 20MM
10	12	7385201	SPACER, .406 X .750 X .250
11	24	3239101	SCREW, M5X10 PHL PAN TT ST
12	2	3238601	M10X1.5 BLIND THREADED INSERT (HEX)
13	12	3236601	WASHER, 3/8 SAE SS
14	1	7781901	LABEL, PLACARD CMRW
15	1	7571301	LABEL, SERIAL NUMBER
16	1	7422004	LABEL, 2" ASTM WARN
17	3	7334001	FOOT, 2.50 X 4.49 FLOV
18	4	3236801	NUT, M10 HEX NYLOCK SS
19	5	3251202	SCREW, M10 X1.5 X 25MM UNS HEX CS ST ZN
20	3	7340201	COVER, FOOT - STRAIGHT
21	4	3236207	SCREW, M10 X1.5 50MM
22	4	7335401	NUT, M10 X 1.5 SOCKET HEAD
23	4	7630101	RETAINER, CM/MJ, PULLEY
24	8	7629901	COVER, PULLEY- BOLTED FULL
25	6	3237801	PULLEY, 4.5" OD
26	2	3236206	SCREW, M10 X1.5 45MM
27	2	3236902	NUT, M16 X 2 HEX JAM SS
28	4	3240502	M10 X 1.5 X 50 HXS NO CUP ST BO
29	4	7328601	GUIDE ROD, .75 OD SOLID 48.38
30	4	7634401	RETAINER, CM/MJ, GUIDEROD
31	4	3232421	RING, BRE .940, 5100-100 ST PP B
32	2	7574101	ASSY, 225LB STACK
33	4	7352101	CUSHION, WEIGHT STACK
34	4	3232413	RING, BRE .588, 5100-62, ST PP B
35	2	7645401	SHAFT, CM/MJ, 6203 BRNG
36	4	3245901	BEARING, 6203
37	2	3241706	SCREW, M6 X1 45MM
38	4	3241801	WASHER, FLAT 6MM SS
39	2	3236217	SCREW, M10 X1.5 100MM
40	2	7348001	LABEL, LIFE FITNESS LOGO
41	6	3254703	NUT, M10 X 1.5 HEX ZINC
42	2	8002401	SPACER, CM/MJ PULLEY

CMRW CABLE MOTION ROW BENCH ASSEMBLY-7772801

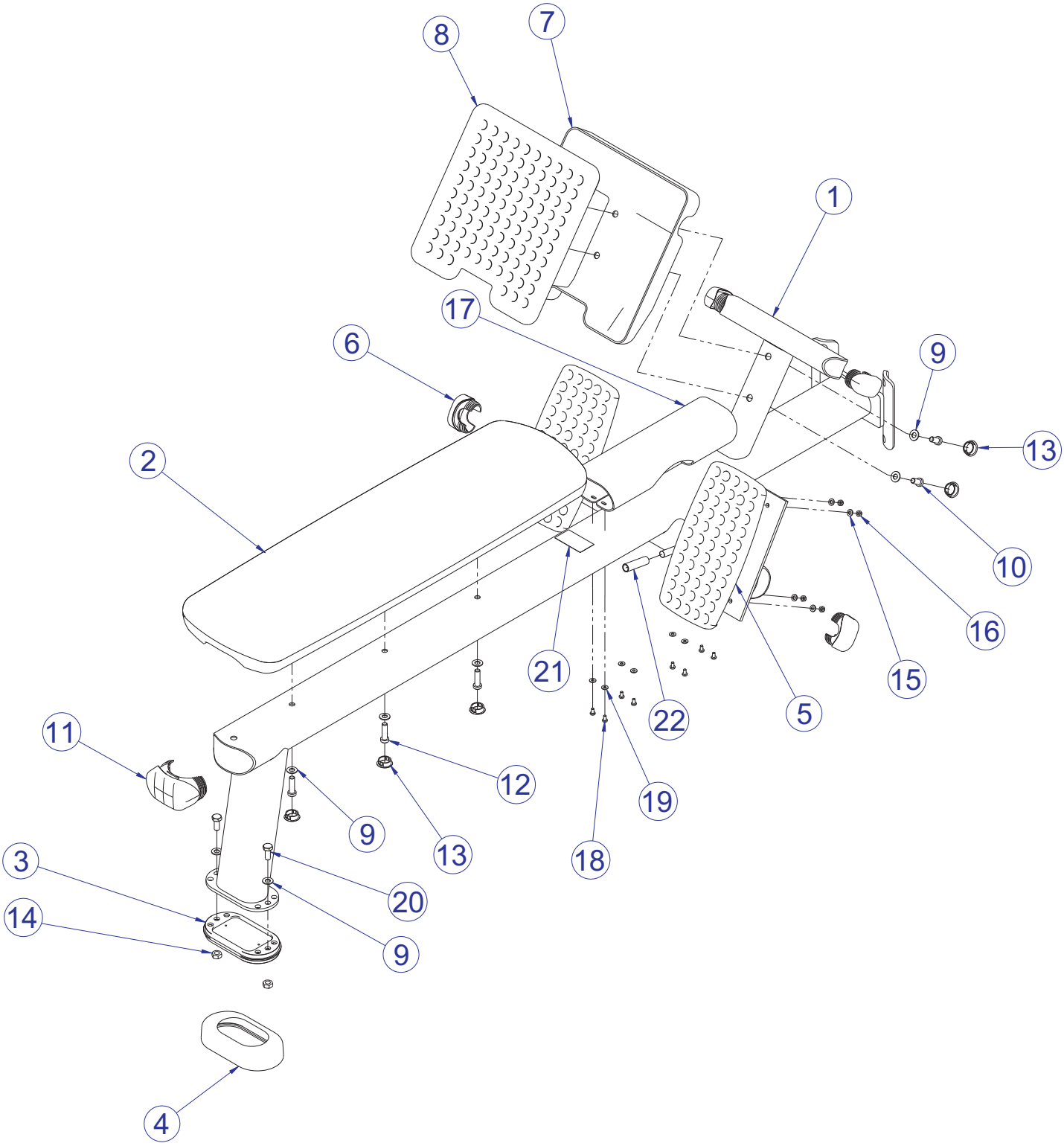

SEE PAGE 8 FOR LEGEND

CMRW CABLE MOTION ROW BENCH ASSEMBLY LEGEND

ITEM NO.	QTY.	PART NO.	DESCRIPTION
1	1	7770401	WLDMT, CMRW BENCH
2	1	7627101	PAD 36.0 X 11 CONVEX
3	1	7334001	FOOT, 2.50 X 4.49 FLOV
4	1	7419701	COVER, FOOT 10 DEG
5	2	7640301	FOOT PAD, CM/MJ, OVERMOLD
6	4	7333801	CAP, SMALL FLOV- END
7	1	7438201	COVER,FZSLP-STEP
8	1	7438301	STEP PLATE,FZSLP- OVERMOLDED
9	7	3236601	WASHER, 3/8 SAE SS
10	2	3236201	SCREW, M10 X1.5 20MM
11	1	7333901	CAP, LARGE FLOV- END
12	3	3236204	SCREW, M10 X1.5 35MM
13	5	3237403	PLUG, 1" HOLE
14	2	3254703	NUT, M10 X 1.5 HEX ZINC
15	8	3241801	WASHER, FLAT 6MM SS
16	8	3236802	NUT, M6 HEX NYLOCK SS
17	1	7713601	COVER, PROTECTIVE
18	8	3239101	SCREW, M5X10 PHL PAN TT ST
19	8	3248101	WSH 10 FL-D ST ZN
20	2	3251202	M10 X 1.5 X 25MM UNS HEX CS ST ZN
21	1	7422003	LABEL, MOVING PARTS
22	1	7749601	SLEEVE, .50" ID X 2.25"

CMRW CABLE MOTION ROW
WEIGHT STACK ASSEMBLY-7574101

WEIGHT STACK LABELS

PART NO	DESCRIPTION
7987201	LABEL, 300 LB STACK
7987401	LABEL, 138 KG STACK

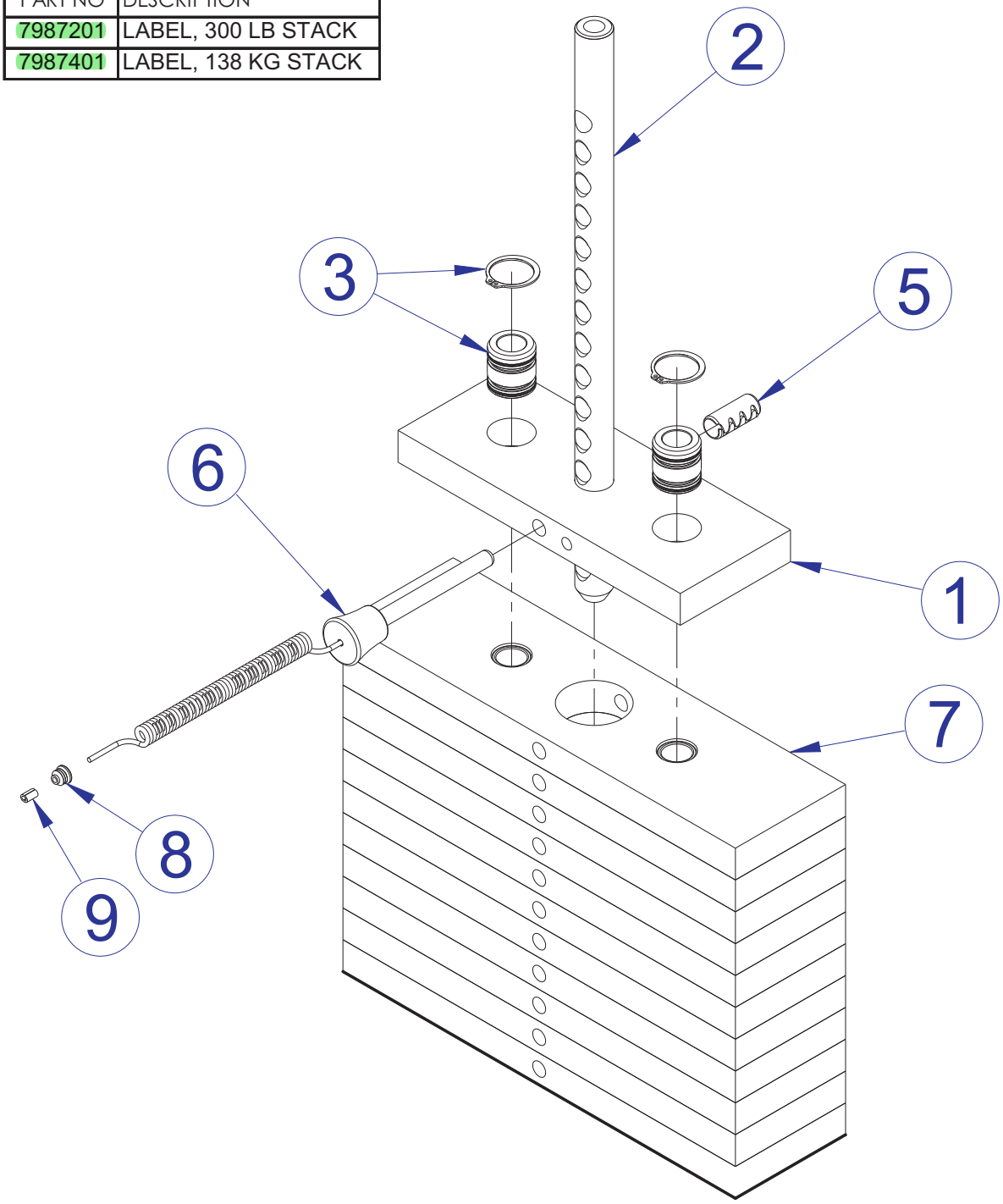

SEE PAGE 10 FOR LEGEND

CMRW CABLE MOTION ROW
WEIGHT STACK ASSEMBLY LEGEND

ITEM NO.	QTY.	PART NO.	DESCRIPTION
1	1	7353901	HEADPLATE, WT. STACK
2	1	7352601	BAYONET, 14 PLATE
3	2	7338001	BUSHING, HEADPLATE
5	1	3236001	BUSHING, SPRING PIN
6	1	7353001	ASSY, SELECTOR PIN
7	14	7353801	ASSY, 15 LB PLATE
8	1	7356501	PLUG, LANYARD ATTACHMENT
9	1	7523601	CRIMP, CABLE

CMRW CABLE MOTION ROW IMAGE