CardioTouch® Screen 770T

Kit Number PKCP-23317 Installation Instructions

This instruction sheet describes how to install the CardioTouch screen for Cybex treadmill model 770T and 790T.

Tools Required

- Phillips screwdriver
- Flashlight
- Clean cloth
- Rubbing alcohol
- ESD (Electrostatic Discharge) grounding strap.

Read and understand all instructions thoroughly before installing this kit.

Verify the kit contents shown.

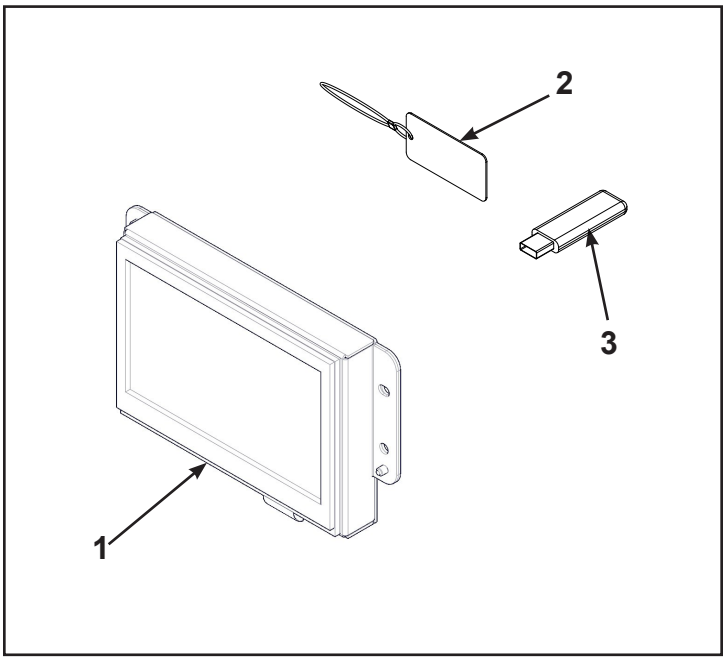

	Description
1	CardioTouch Screen
2	USB key FOB W-Lanyard
3	USB 2.0 flash drive

Disconnect external power source

Unplug the treadmill from the power outlet.

***WARNING:* Shock and electrocution hazard**

- *Unplug unit and let sit 10 minutes before cleaning or performing maintenance*
- *Electrical charge can remain in unit after unplugging*
- *Keep water and liquids away from electrical parts*

***NOTICE:* Component damage**

Wear an ESD grounding strap during this procedure. Connect ESD grounding strap to frame bolts or unpainted metal of frame. If ESD grounding strap is not available, touch frame bolts or unpainted metal of frame before handling any electronics.

Remove headphone jack

1. Remove the two screws securing the headphone jack cover to the handset using a Phillips screwdriver.

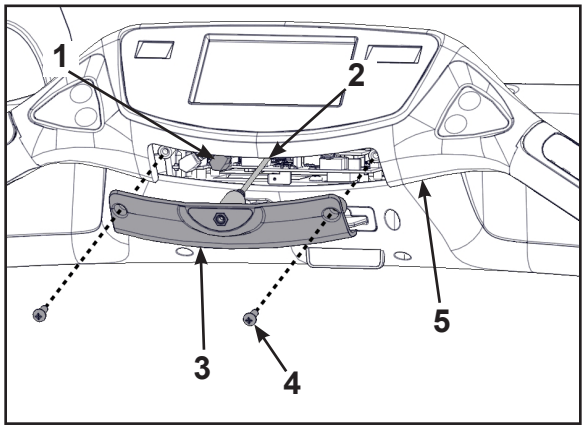

	Description
1	Connector J6
2	Headphone jack cable
3	Headphone jack cover
4	Screws (2)
5	Handset

2. Unplug the headphone jack cable carefully from the connector J6 on the MCC board (connector on right). Pull connector straight out, cable uses a 90 degree connector.

Remove handset assembly

1. Remove the eight screws securing the handset to the console using a Phillips screwdriver.

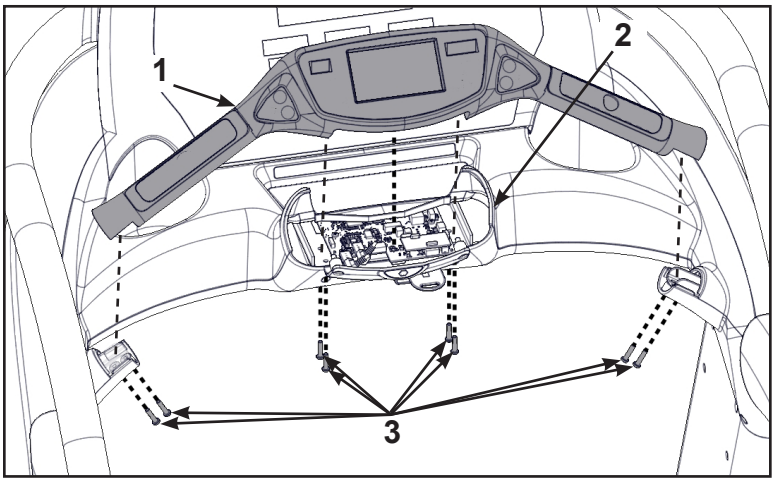

	Description
1	Handset assembly
2	Console
3	Screws (8)

2. Unplug cables by un-latching connector from the MCC board with the following procedure Use flashlight to locate connector latch and orientation. Note the orientation of the cable connector:

   A. Press in the latch of the cable connector.

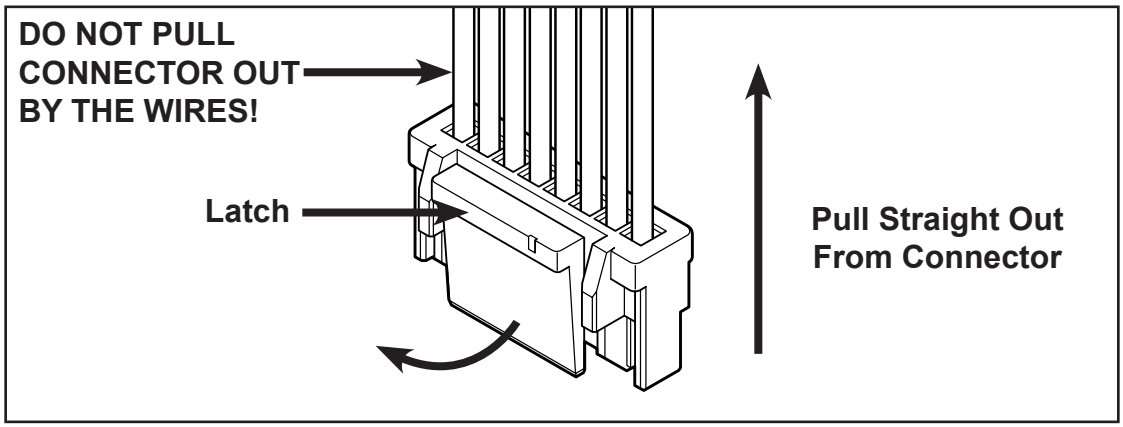

   B. Ensure the latch disengages the connector.

   C. Unplug cable by holding down the latch and pulling straight out from the connector. Do not pull on wires, remove by connector.

3. Carefully lift the handset assembly and unplug the following cables: contact heart rate grips (J7), handset membrane (J9) and the ground wire (located under the MCC board).

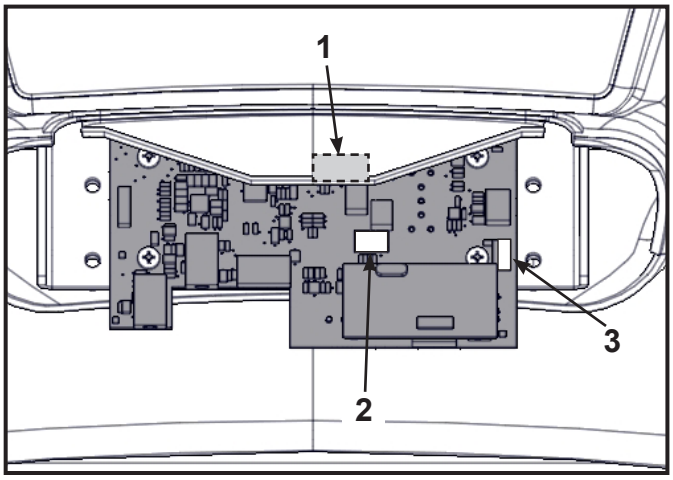

	Description
1	Graphics Board (J12) (under cover)
2	Handset Membrane (J9)
3	Contact Heart Rate Grips (J7)

4. Lift the handset assembly carefully and unplug the graphics board cable (J12). The iPod cable is held in place by a notch in the access cover.

   A. Press in both side latches of the cable connector.

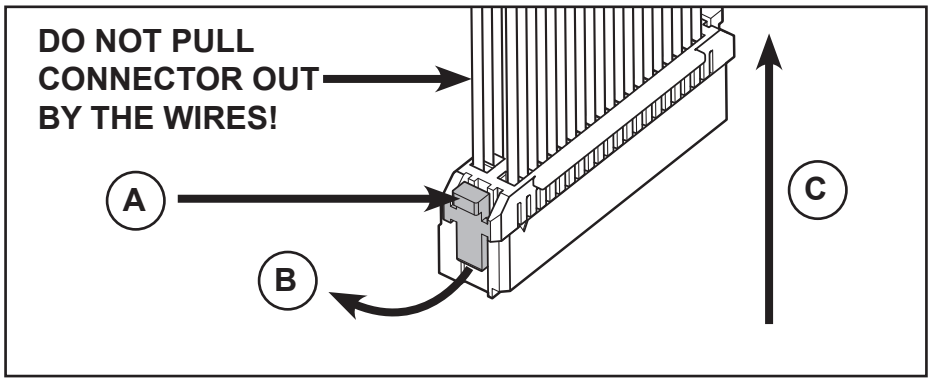

   B. Ensure the latches disengage from the connector.

   C. Unplug cable by holding down the latches on both sides and pulling straight out from the connector. Do not pull on wires, remove by connector.

Remove CardioTouch screen

Do not scratch front face of handset. Place on clean cloth or other soft surface.

1. Unplug the USB cable from the CardioTouch board.

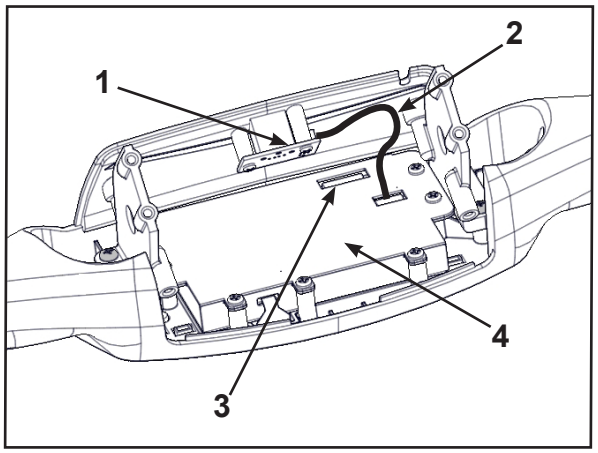

	Description
1	USB Board
2	USB Cable
3	Graphics Board Cable
4	CardioTouch Board

2. Unplug the graphics board cable from the CardioTouch board.

3. Remove the two screws and USB cover from the two support brackets using a Phillips screwdriver.

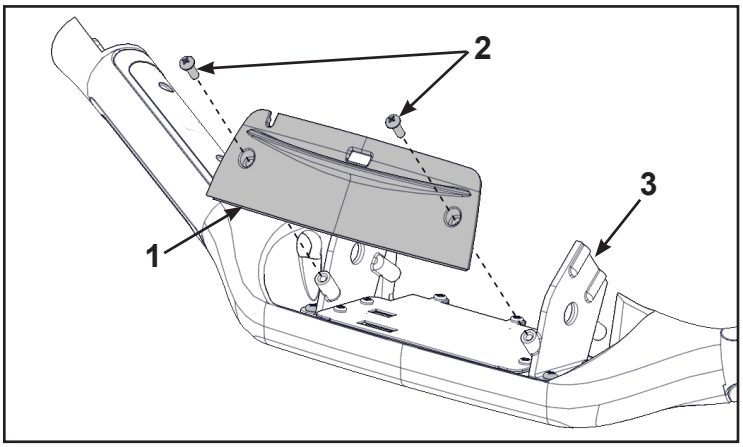

	Description
1	USB Cover
2	Screws (2)
3	Support Bracket

4. Remove the four screws and two support brackets using a Phillips screwdriver.

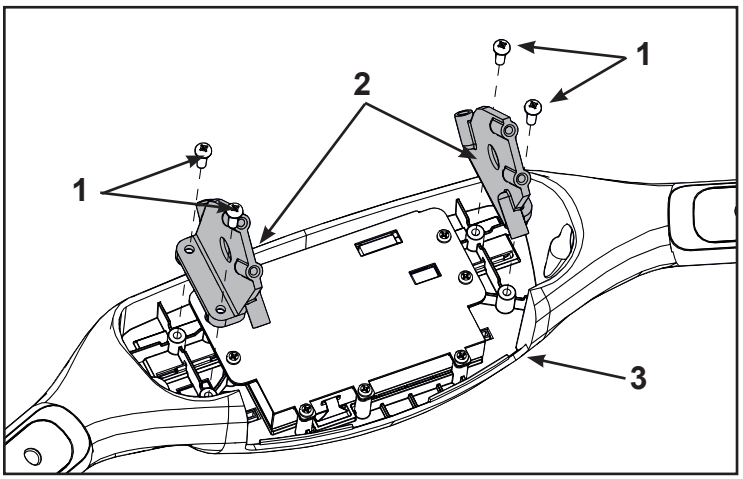

	Description
1	Screws (2)
2	Support Brackets
3	Handset

5. Remove the seven screws and ground cable using a Phillips screwdriver.

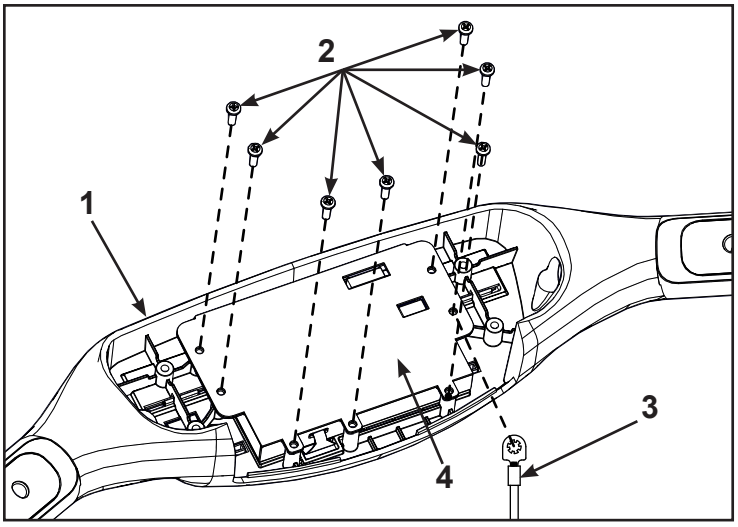

	Description
1	Handset
2	Screws (7)
3	Ground cable
4	CardioTouch board

6. Remove the CardioTouch screen and clean the area with a clean cloth and rubbing alcohol.

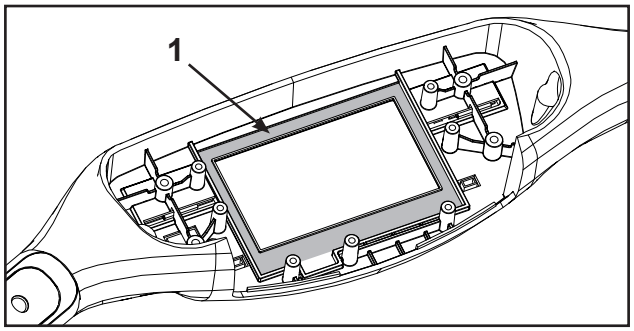

	Description
1	Clean this area

Install CardioTouch screen

1. Place the CardioTouch board in place in the handset.

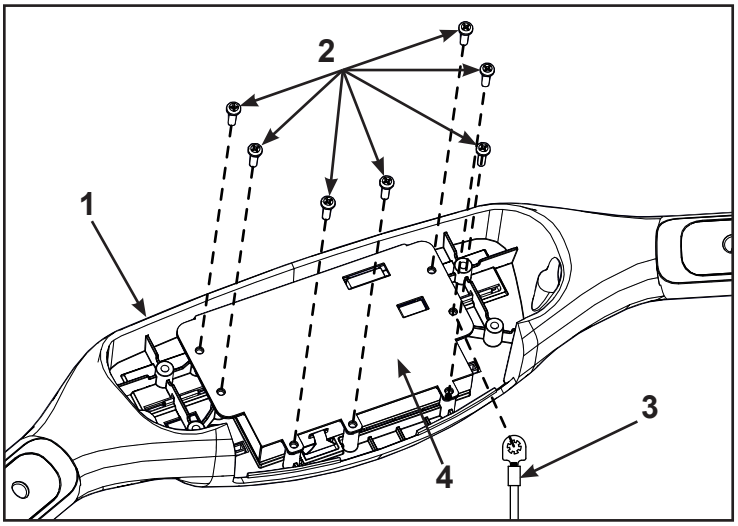

	Description
1	Handset
2	Screws (7)
3	Ground cable
4	CardioTouch board

2. Install the ground cable with a screw in the location shown and tighten by hand.
3. Install the remaining six screws by hand.
4. Tighten the seven screws in the order shown to 4 in-lbs (0.45 Nm) using a torque screwdriver.

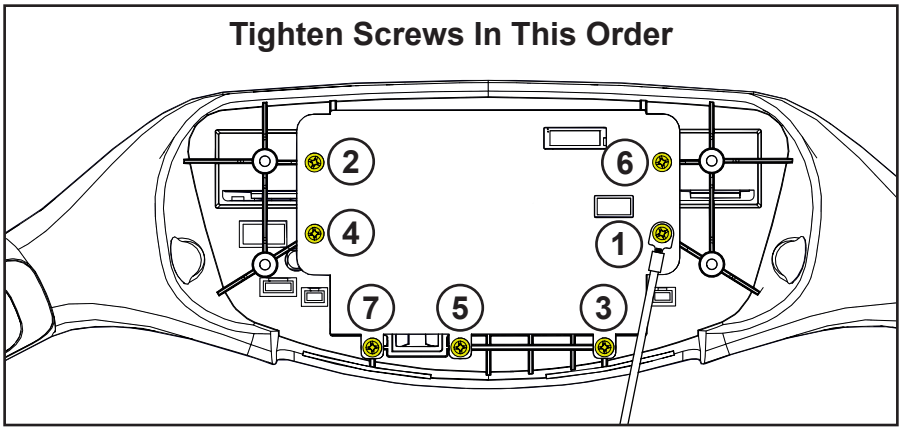

5. Install the four screws and two support brackets using a Phillips screwdriver.

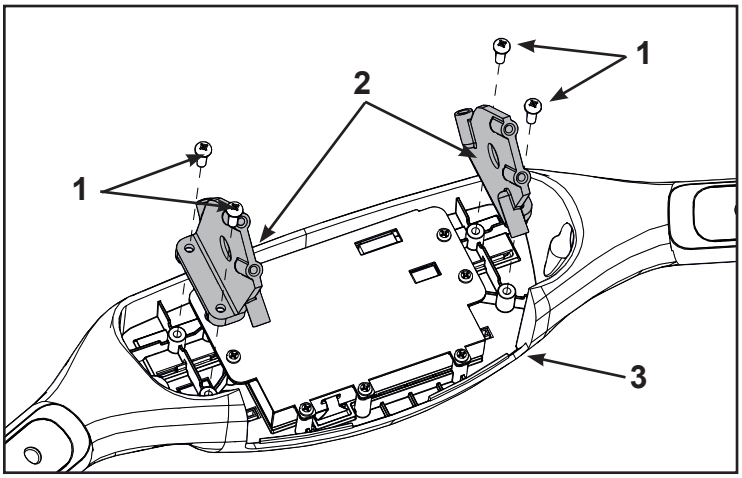

	Description
1	Screws (2)
2	Support Brackets
3	Handset

6. Install the USB cover to the two support brackets using two screws and a Phillips screwdriver.

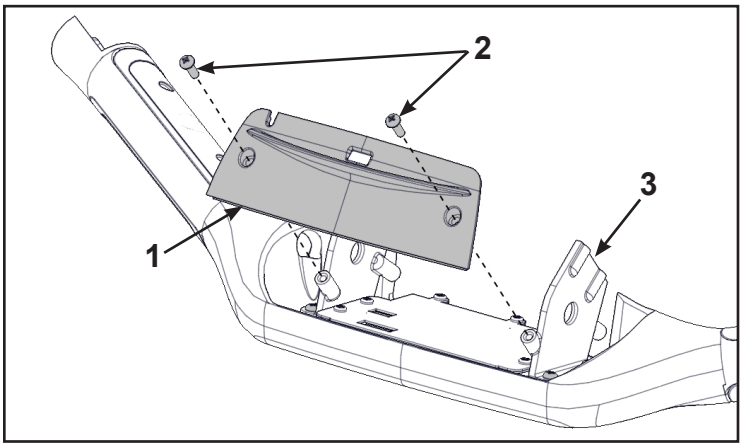

	Description
1	USB Cover
2	Screws (2)
3	Support Bracket

7. Plug the graphics board cable into the CardioTouch board.

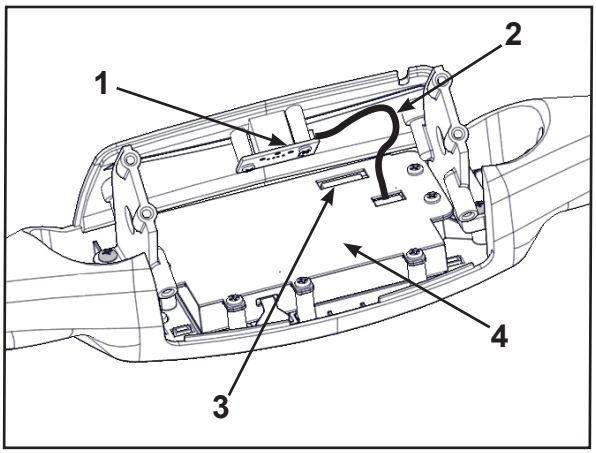

	Description
1	USB Board
2	USB Cable
3	Graphics Board Cable
4	CardioTouch Board

8. Plug the USB cable into the CardioTouch board.

Install handset assembly

1. Place the handset assembly in position and plug in the following cables: contact heart rate grips (J7), handset membrane (J9), graphics board (J12) and the ground wire. Note the orientation of the cable connectors.

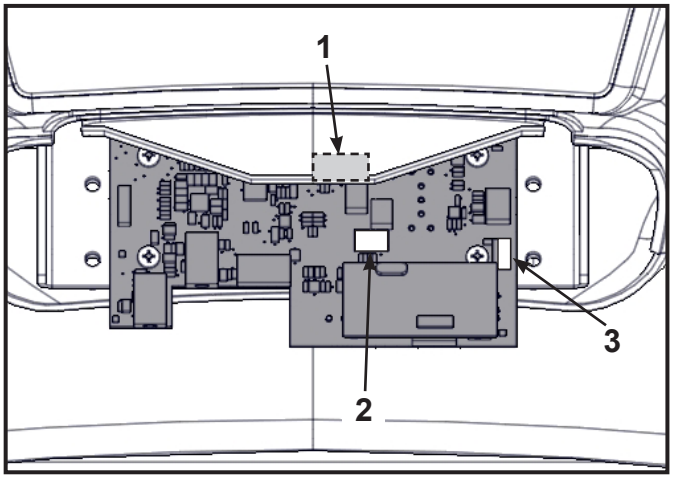

	Description
1	Graphics Board (J12) (under cover)
2	Handset Membrane (J9)
3	Contact Heart Rate Grips (J7)

Ensure the iPod cable is routed through the notch in the access cover.

2. Using a Phillips screwdriver, install the eight screws securing the handset assembly to the console.

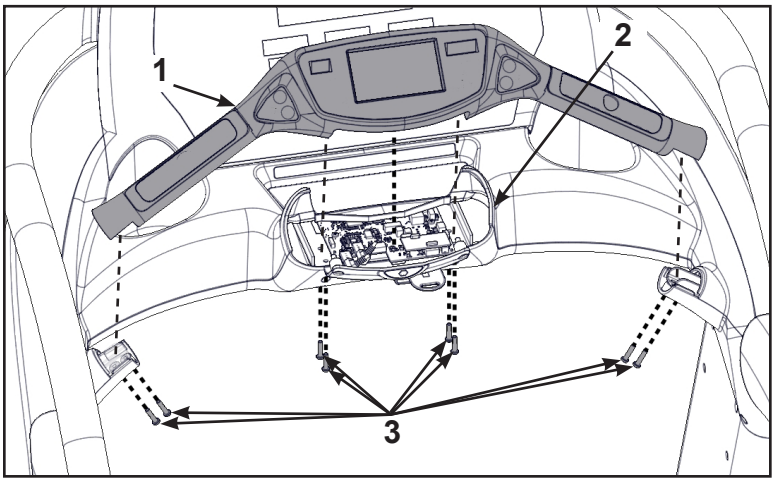

	Description
1	Handset assembly
2	Console
3	Screws (8)

Update software

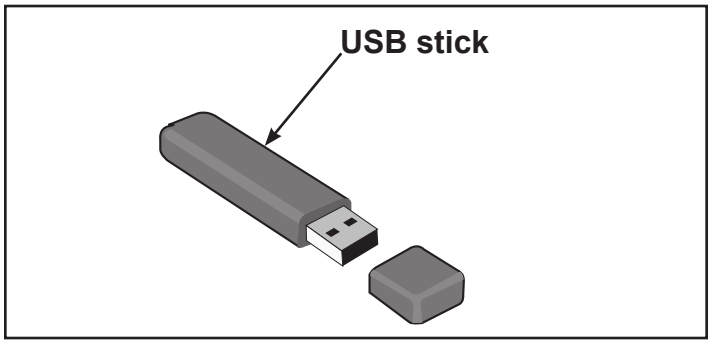

NOTICE: ***Repairs and Service***

- *DO NOT load zip files onto USB stick*
- *Load un-zipped files onto USB stick*
- *DO NOT remove USB stick during upload procedure*
- *Power must remain on during upload procedure*
- *DO NOT press any keys on console during upload procedure*

Software can ONLY be installed on the model it is designed for. Do NOT install this software on other Arc Trainers, Bikes, or Treadmills.

Prepare USB stick

1. Plug USB stick into PC.
2. Delete any files on USB stick. Verify USB stick is blank.
3. Please go to the Team Cybex service product pages for the latest software files or contact Cybex Customer Service at 508-533-4300 to receive via email.
4. Unzip file to a folder on PC. Zip file contains the following files:
   - Folder labeled “boot”
   - Empty text file with model name of product
   - Other single files
5. Copy the “boot” folder and other files to USB stick. DO NOT copy zip file to USB stick.

Perform both procedures for internal and external USB ports.

Install software through internal USB port

1. Remove the two screws securing the headphone jack cover to the handset using a Phillips screwdriver.

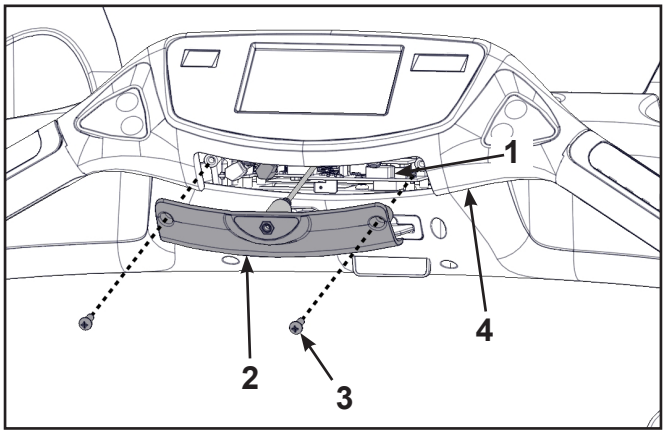

	Description
1	Internal USB Port
2	Headphone jack cover
3	Screws (2)
4	Handset

2. Insert USB stick into the internal USB port. Do NOT insert USB stick into optional E3 View Monitor.
3. Plug the power cord into the power outlet. Toggle the power switch on (I).

NOTICE: ***Console damage may occur***
Do NOT turn the power off, press any keys, or remove the USB stick during this procedure.

The software will load into the console. This procedure will take approximately 3 minutes. During this time there will be beeping noises from the console. When the upload is complete, the display will show [re][bot].

4. Toggle the power switch off (0).
5. Remove USB stick from the internal USB port.

Install software through external USB port

1. Insert USB stick into the external USB port.

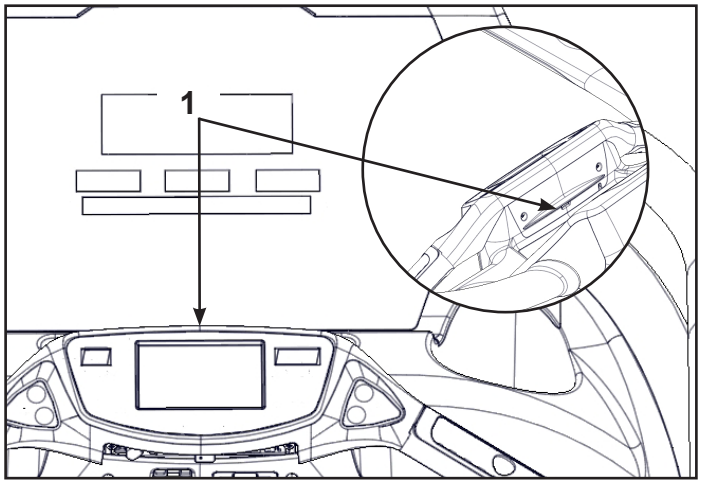

	Description
1	External USB Port

2. Toggle the power switch on (I).

NOTICE: ***Console damage may occur***
Do NOT turn the power off, press any keys, or remove the USB stick during this procedure.

The software will load into the console. This procedure may take up to 4 minutes. During the first two minutes the screen will be blank and not show any progress. Do NOT turn the power off, press any keys, or remove the USB stick.

After the initial period, the screen will display “Loading” and “Please wait”. This procedure may take up to 2 minutes. When the upload is complete, the display will return to the home screen.

3. Toggle the power switch off (0).
4. Remove the USB stick from the external USB port.

Install headphone jack

1. Plug the headphone jack cable into the connector J6 on the MCC board (connector on right).

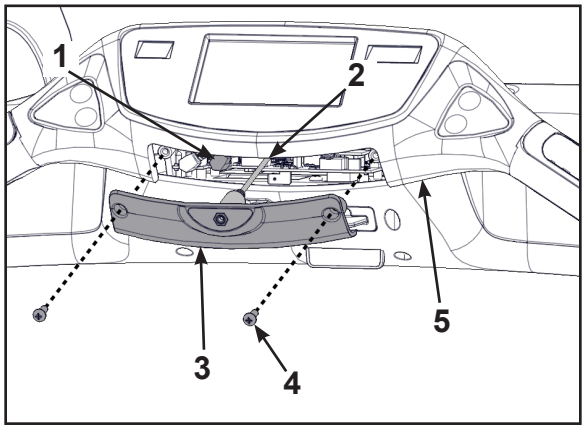

	Description
1	Connector J6
2	Headphone jack cable
3	Headphone jack cover
4	Screws (2)
5	Handset

2. Install the two screws securing the headphone jack cover to the handset using a Phillips screwdriver.

Complete installation

1. Verify the power cord is not being pinched under the front of the treadmill.
2. Toggle the power switch on (I).
3. Operate the unit at all levels to verify proper operation.

Cybex® and the Cybex logo are registered trademarks of Cybex International, Inc.
10 Trotter Drive Medway, MA 02053
508-533-4300 • FAX 508-533-5183 • www.cybexintl.com
Copyright © 2013, Cybex International, Inc. All rights reserved • LT-23328-4 C • October 2013