Software Update

Kit Number PKCP-23201 Instruction Sheet

This instruction sheet describes how to update the software for Cybex 525X, 62XX, and 77XX model Arc Trainers, Bikes, and Treadmills.

The procedures outlined in the instruction sheet are:

- Update software, 525X models
- Update software, 62XX models
- Update software, 77XX models

Tools Required

- Phillips screwdriver
- 24 Volt power supply (TR-23830 and power cord). Recommended for self powered Arc Trainers and Bikes.

Read and understand all instructions thoroughly before installing this kit.

Verify the kit contents shown.

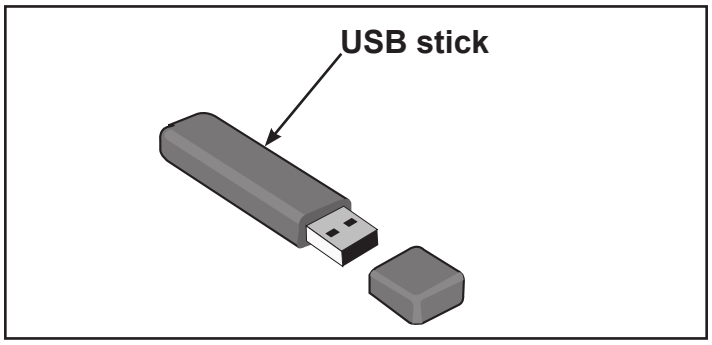

***NOTICE:* Repairs and Service**

- *DO NOT load zip files onto USB stick*
- *Load un-zipped files onto USB stick*
- *DO NOT remove USB stick during upload procedure*
- *Power must remain on during upload procedure*
- *DO NOT press any keys on console during upload procedure*

Update software, 525X models

Software can ONLY be installed on the model it is designed for. Do NOT install this software on other Arc Trainers, Bikes, or Treadmills.

Prepare USB stick

1. Plug USB stick into PC.
2. Delete any files on USB stick. Verify USB stick is blank.
3. Please go to the Team Cybex service product pages for the latest software files or contact Cybex Customer Service at 508-533-4300 to receive via email.
4. Unzip file to a folder on PC. Zip file contains the following files:
   - Folder labeled “boot”
   - Empty text file with model name of product
5. Copy the “boot” folder and other file to USB stick. DO NOT copy zip file to USB stick.

Install software through internal USB port

1. Turn power off.

Arc Trainers and Bikes	Treadmills
Press **STOP** or **PAUSE** and wait for unit to power off.	Toggle the power switch off (0). Power switch is located under the front end of the unit.

2. Access internal USB port.
3. Remove the four short screws and one long screw securing the front cover and iPad clip to the console assembly using a Phillips screwdriver. 525T treadmill shown.

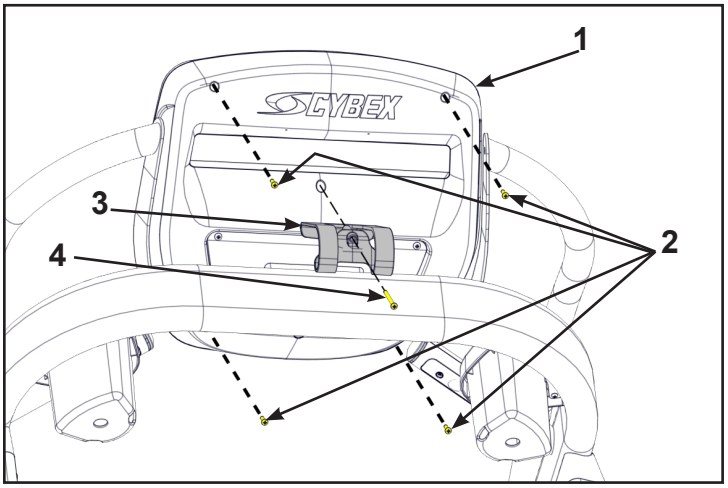

	Description
1	Console assembly
2	Short screws (4)
3	iPad clip
4	Long screw (1)

4. Tilt console assembly forward and insert USB stick into the internal USB port of the MCC board. Do NOT insert USB stick into optional E3 View Monitor.

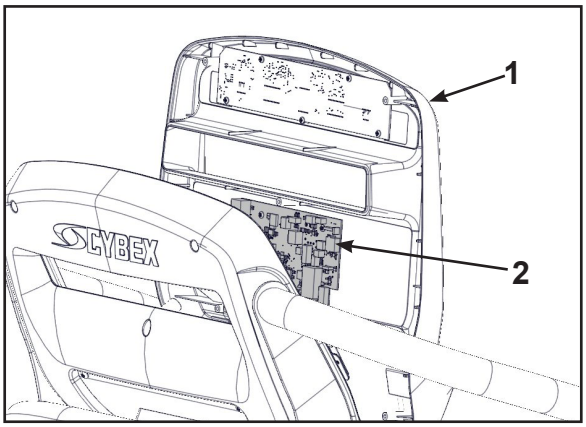

	Description
1	Console assembly
2	MCC board

5. Turn power on.

NOTICE: ***Console damage may occur***
Do NOT turn the power off, press any keys, or remove the USB stick during this procedure.

Arc Trainers and Bikes	Treadmills
Option 1: Plug in the 24 Volt power supply. **Option 2:** Begin striding or pedaling the unit until the console lights up. Do not stop striding or pedaling until the upload is complete.	Toggle the power switch on (I).

The software will load into the console. This procedure will take approximately 3 minutes. During this time there will be beeping noises from the console. When the upload is complete, the display will show [re][bot].

6. Turn power off.

Arc Trainers and Bikes	Treadmills
Option 1: Unplug in the 24 Volt power supply. **Option 2:** Stop striding or pedaling the unit. Press **STOP** or **PAUSE** and wait for unit to power off.	Toggle the power switch off (0).

7. Remove USB stick from the internal USB port.

8. Install the four short screws and one long screw securing the front cover and iPad clip to the console assembly using a Phillips screwdriver.

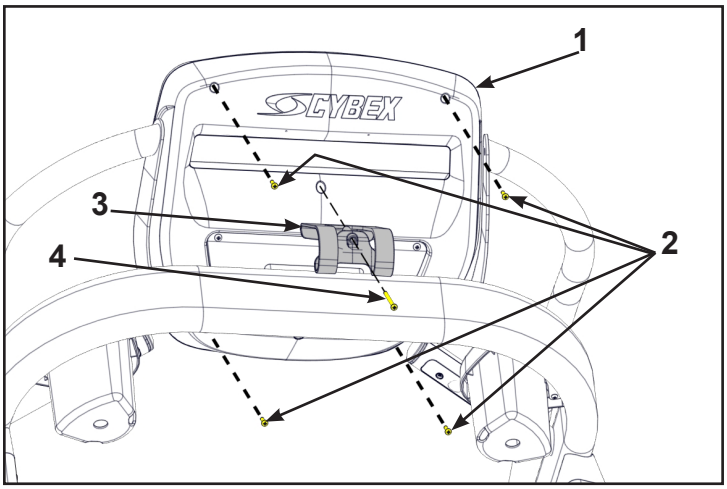

	Description
1	Console assembly
2	Short screws (4)
3	iPad clip
4	Long screw (1)

Complete update

1. Turn power on.

Arc Trainers and Bikes	Treadmills
Begin striding or pedaling the unit until the console lights up.	Toggle the power switch on (I).

2. Operate the unit at all levels to verify proper operation.

Update software, 62XX models

Software can ONLY be installed on the model it is designed for. Do NOT install this software on other Arc Trainers, Bikes, or Treadmills.

Prepare USB stick

1. Plug USB stick into PC.
2. Delete any files on USB stick. Verify USB stick is blank.
3. Please go to the Team Cybex service product pages for the latest software files or contact Cybex Customer Service at 508-533-4300 to receive via email.
4. Unzip file to a folder on PC. Zip file contains the following files:
   - Folder labeled “boot”
   - Empty text file with model name of product
5. Copy the “boot” folder and other file to USB stick. DO NOT copy zip file to USB stick.

Install software through internal USB port

1. Turn power off.

Arc Trainers and Bikes	Treadmills
Press **STOP** or **PAUSE** and wait for unit to power off.	Toggle the power switch off (0). Power switch is located under the front end of the unit.

2. Access internal USB port.

Arc Trainers and Bikes	Treadmills
Remove the four screws securing the back cover to the console using a Phillips screwdriver.	Remove the two screws securing the headphone jack cover to the handset using a Phillips screwdriver.
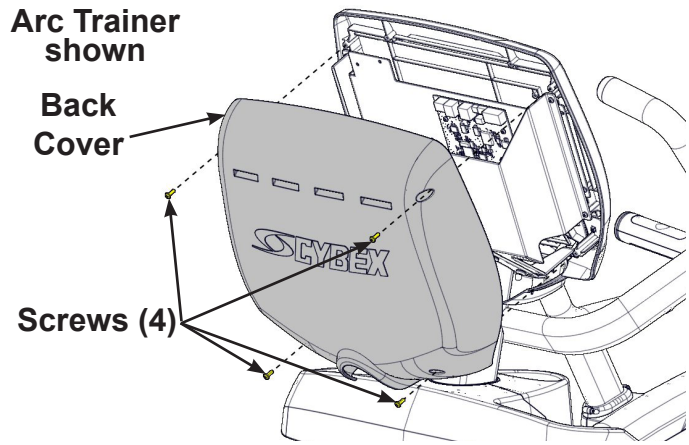	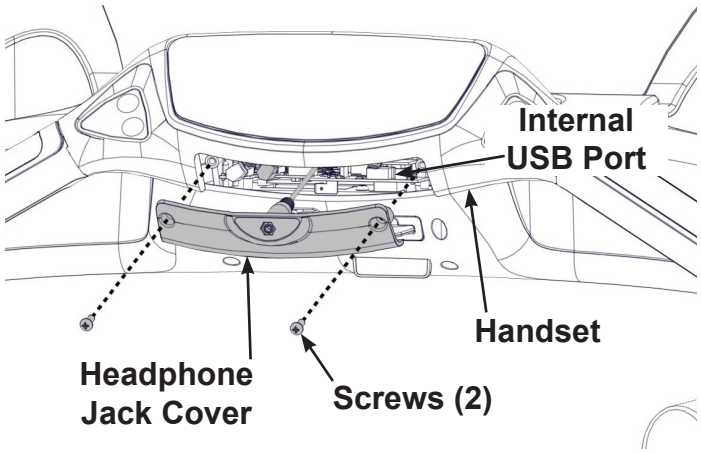
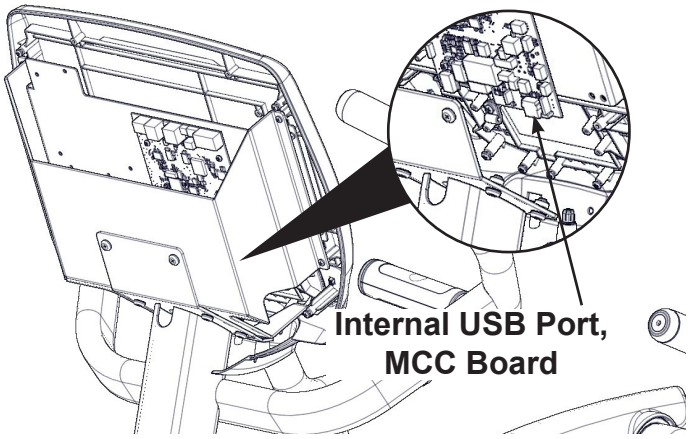	

3. Insert USB stick into the internal USB port. Do NOT insert USB stick into optional E3 View Monitor.

4. Turn power on.

NOTICE: ***Console damage may occur***
Do NOT turn the power off, press any keys, or remove the USB stick during this procedure.

Arc Trainers and Bikes	Treadmills
Option 1: Plug in the 24 Volt power supply. **Option 2:** Begin striding or pedaling the unit until the console lights up. Do not stop striding or pedaling until the upload is complete.	Toggle the power switch on (I).

The software will load into the console. This procedure will take approximately 3 minutes. During this time there will be beeping noises from the console. When the upload is complete, the display will show [re][bot].

5. Turn power off.

Arc Trainers and Bikes	Treadmills
Option 1: Unplug in the 24 Volt power supply. **Option 2:** Stop striding or pedaling the unit. Press **STOP** or **PAUSE** and wait for unit to power off.	Toggle the power switch off (0).

6. Remove USB stick from the internal USB port.

7. Install covers.

Arc Trainers and Bikes	Treadmills
Install the four screws securing the back cover to the console using a Phillips screwdriver.	Install the two screws securing the headphone jack cover to the handset using a Phillips screwdriver.
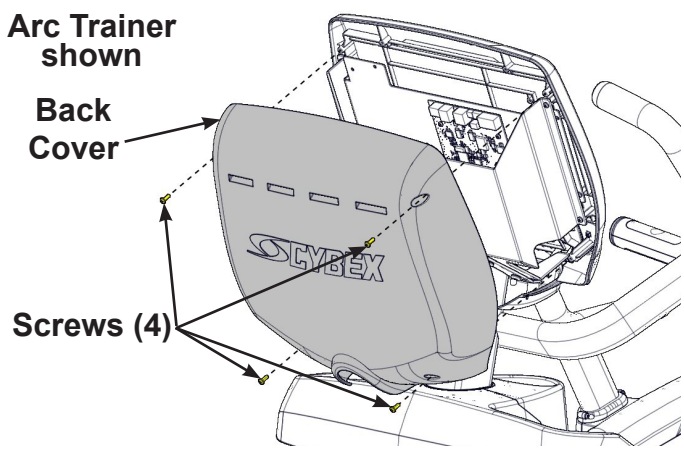	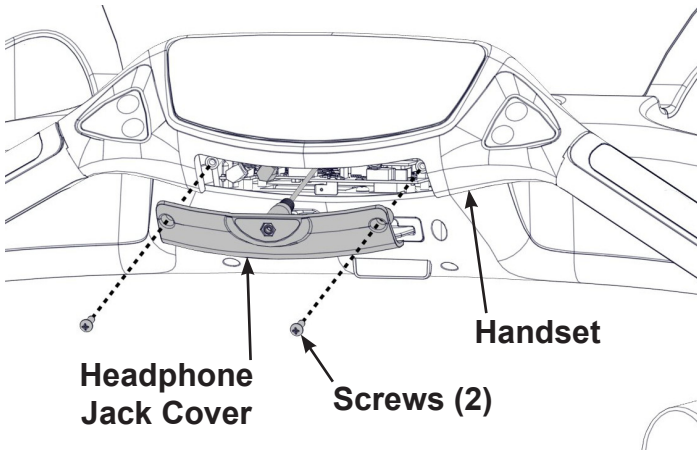

Complete update

1. Turn power on.

Arc Trainers and Bikes	Treadmills
Begin striding or pedaling the unit until the console lights up.	Toggle the power switch on (I).

2. Operate the unit at all levels to verify proper operation.

Update software, 77XX models

Software can ONLY be installed on the model it is designed for. Do NOT install this software on other Arc Trainers, Bikes, or Treadmills.

Prepare USB stick

1. Plug USB stick into PC.
2. Delete any files on USB stick. Verify USB stick is blank.
3. Please go to the Team Cybex service product pages for the latest software files or contact Cybex Customer Service at 508-533-4300 to receive via email.
4. Unzip file to a folder on PC. Zip file contains the following files:
   - Folder labeled “boot”
   - Empty text file with model name of product
   - Other single files
5. Copy the “boot” folder and other files to USB stick. DO NOT copy zip file to USB stick.

Perform both procedures for internal and external USB ports.

Install software through internal USB port

1. Turn power off.

Arc Trainers and Bikes	Treadmills
Press **STOP** or **PAUSE** and wait for unit to power off.	Toggle the power switch off (0). Power switch is located under the front end of the unit.

2. Access internal USB port.

Arc Trainers and Bikes	Treadmills
Remove the four screws securing the back cover to the console using a Phillips screwdriver.	Remove the two screws securing the headphone jack cover to the handset using a Phillips screwdriver.
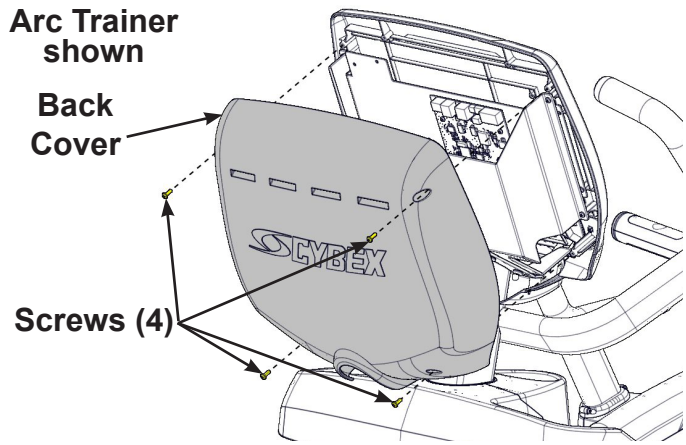	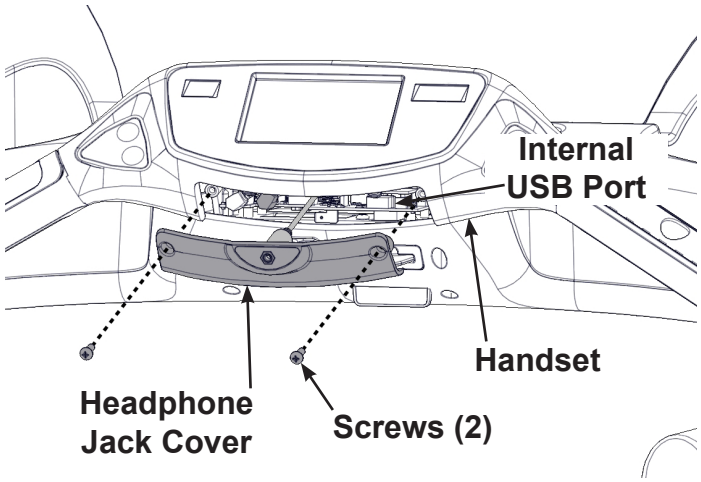
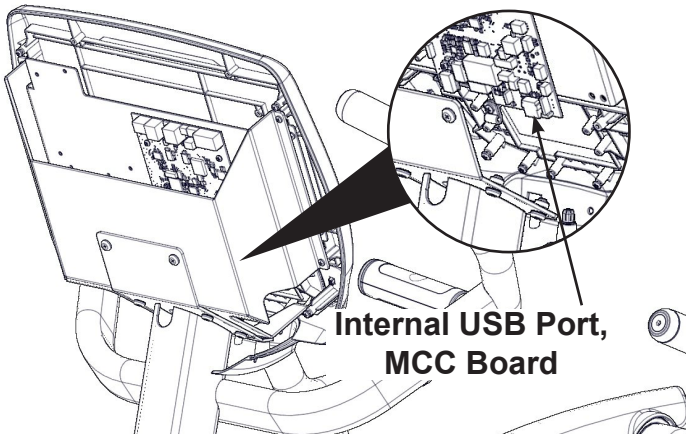	

3. Insert USB stick into the internal USB port. Do NOT insert USB stick into optional E3 View Monitor.

4. Turn power on.

NOTICE: ***Console damage may occur***
Do NOT turn the power off, press any keys, or remove the USB stick during this procedure.

Arc Trainers and Bikes	Treadmills
Option 1: Plug in the 24 Volt power supply. **Option 2:** Begin striding or pedaling the unit until the console lights up. Do not stop striding or pedaling until the upload is complete.	Toggle the power switch on (I).

The software will load into the console. This procedure will take approximately 3 minutes. During this time there will be beeping noises from the console. When the upload is complete, the display will show [re][bot].

5. Turn power off.

Arc Trainers and Bikes	Treadmills
Option 1: Unplug in the 24 Volt power supply. **Option 2:** Stop striding or pedaling the unit. Press **STOP** or **PAUSE** and wait for unit to power off.	Toggle the power switch off (0).

6. Remove USB stick from the internal USB port.

Install software through external USB port

1. Insert USB stick into the external USB port.

Arc Trainers and Bikes	Treadmills
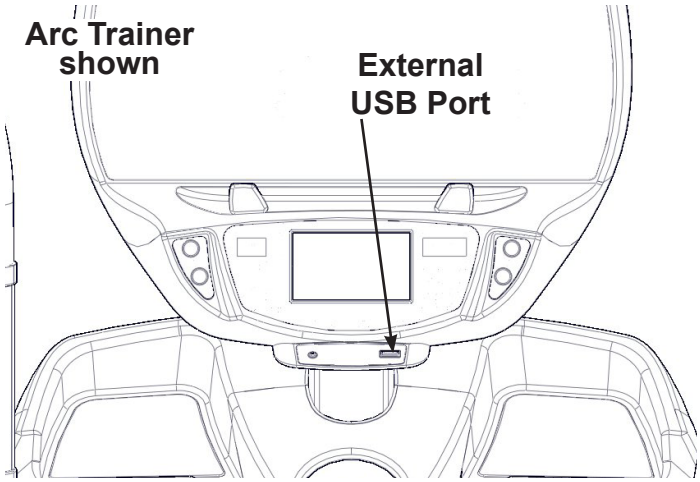	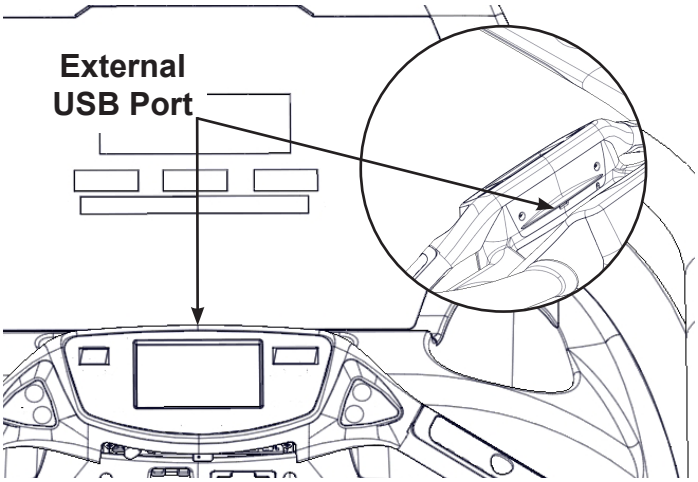

2. Turn power on.

NOTICE: ***Console damage may occur***
Do NOT turn the power off, press any keys, or remove the USB stick during this procedure.

Arc Trainers and Bikes	Treadmills
Option 1: Plug in the 24 Volt power supply. **Option 2:** Begin striding or pedaling the unit until the console lights up. Do not stop striding or pedaling until the upload is complete.	Toggle the power switch on (I).

The software will load into the console. This procedure may take up to 4 minutes. During the first two minutes the screen will be blank and not show any progress. Do NOT turn the power off, press any keys, or remove the USB stick.

After the initial period, the screen will display “Loading” and “Please wait”. This procedure may take up to 2 minutes. When the upload is complete, the display will return to the home screen.

3. Turn power off.

Arc Trainers and Bikes	Treadmills
Option 1: Unplug in the 24 Volt power supply. **Option 2:** Stop striding or pedaling the unit. Press **STOP** or **PAUSE** and wait for unit to power off.	Toggle the power switch off (0).

4. Remove the USB stick from the external USB port.

5. Install covers.

Arc Trainers and Bikes	Treadmills
Install the four screws securing the back cover to the console using a Phillips screwdriver.	Install the two screws securing the headphone jack cover to the handset using a Phillips screwdriver.
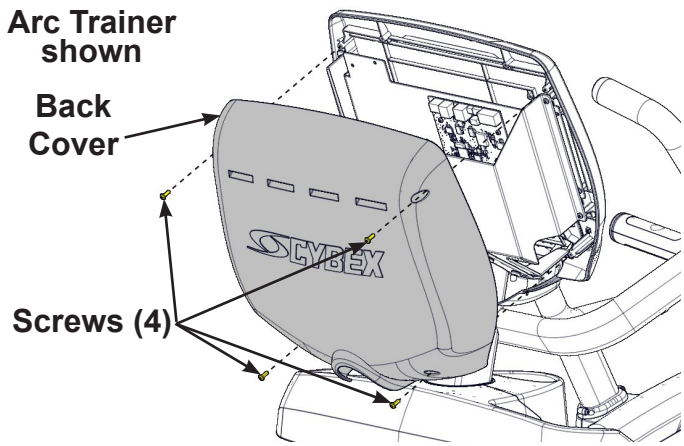	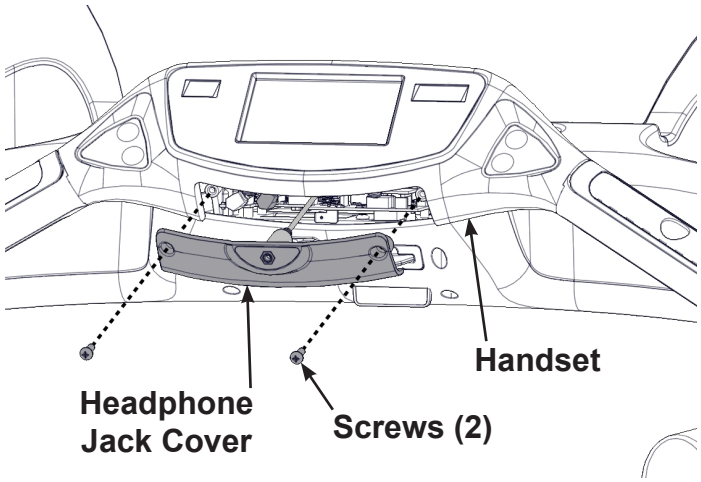

Complete update

1. Turn power on.

Arc Trainers and Bikes	Treadmills
Begin striding or pedaling the unit until the console lights up.	Toggle the power switch on (I).

2. Operate the unit at all levels to verify proper operation.

Cybex® and the Cybex logo are registered trademarks of Cybex International, Inc.
10 Trotter Drive Medway, MA 02053
508-533-4300 • FAX 508-533-5183 • www.cybexintl.com
Copyright © 2014, Cybex International, Inc. All rights reserved • LT-23162-4 F • January 2014