Prestige Row/Rear Delt TA

21430-10

Parts Manual

5/22/2021 9:41:28 AM

LifeFitness
WHAT WE LIVE FOR

Table of Contents

Top_Weight_Assembly_15_21400-011....3
21430_Arm_Assembly....5
21430_Belt_Routing....6
21430_Frame_Assembly....7
21430_Panel_Assembly....9
21430_Seat_Assembly....11
21430_Top_Plastic_Detail....13
21430_Weight_Stack_Detail....14

Top_Weight_Assembly_15_21400-011

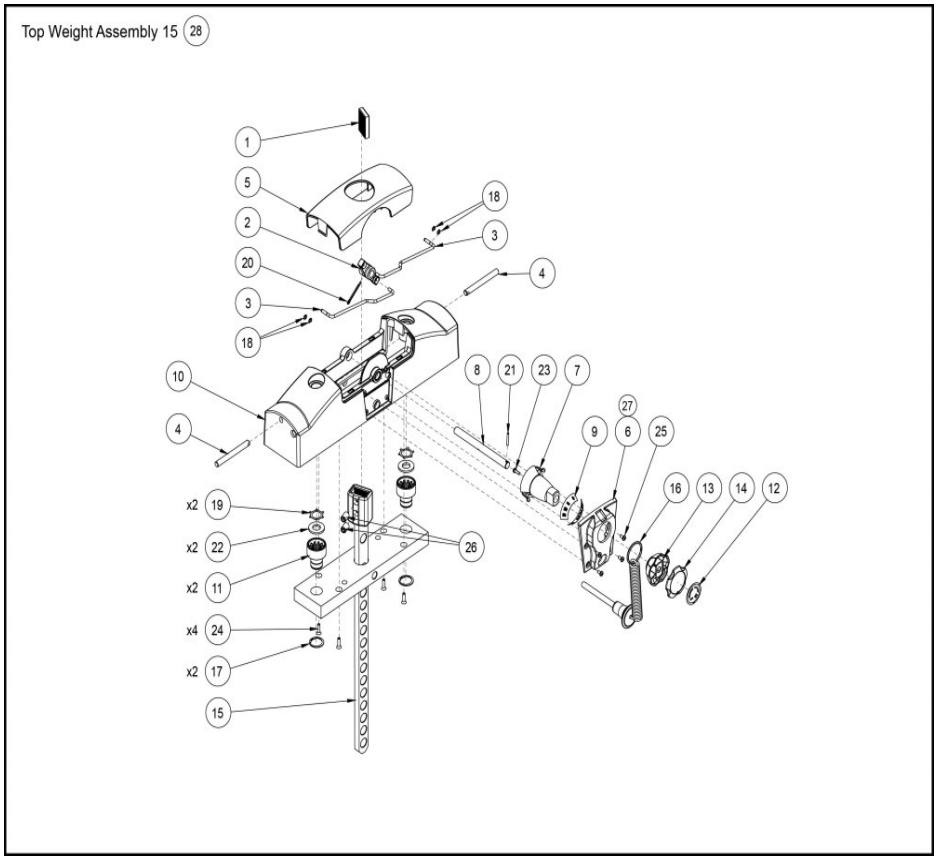

Ref #	Part Number	Qty	Description
1	11040-301	1	INSERT CLAMP BLOCK
2	11040-367	1	HUB MOLDED
3	11040-369	2	ROD LINKAGE
4	11040-370	2	PIN
5	11040-416	1	COVER TOP WEIGHT
6	11040-424	1	COVER PLATE
7	11040-426	1	STEM
8	11040-427	1	ROD
9	11040-428	1	DECAL ADJUSTMENT
10	11050-366	1	TOP WT ASSY, MOLDED
11	13000-364	2	BEARING FLNG .62 ID X .92 OD X 1.75 LG
12	14051-308	1	Decal Rotation
13	20000-476	1	KNOB, BASE
14	20000-477	1	KNOB
15	21000-231	1	C LIFTING POST 15
16	BH030207	1	PIN WEIGHT SELECTOR
17	BR030206	2	RETAINING RING
18	BR030209	4	RETAINING RING .188
19	BR030220	2	RETAINING RING 1.250 INTERNAL
20	HP016820	1	COTTER PIN .125 X 1.25
21	HP266765	1	ROLL PIN .125 X .938
22	HS720004	2	WASHER FELT .641 ID X 1.250 OD X .125 T

Ref #	Part Number	Qty	Description
23	HT552512	1	TAP SC NO. 8-16 X .50 PLASTITE PAN HEAD PHILLIPS BLACK
24	HT562715	4	TAP SC NO 10 X .750 F PHIL
25	HT582510	4	TAP SC NO 10 X .375 PN HD PHIL
26	HY740000	2	SET SCREW
28	21400-011	1	TOP WEIGHT ASSY 15

21430_Arm_Assembly

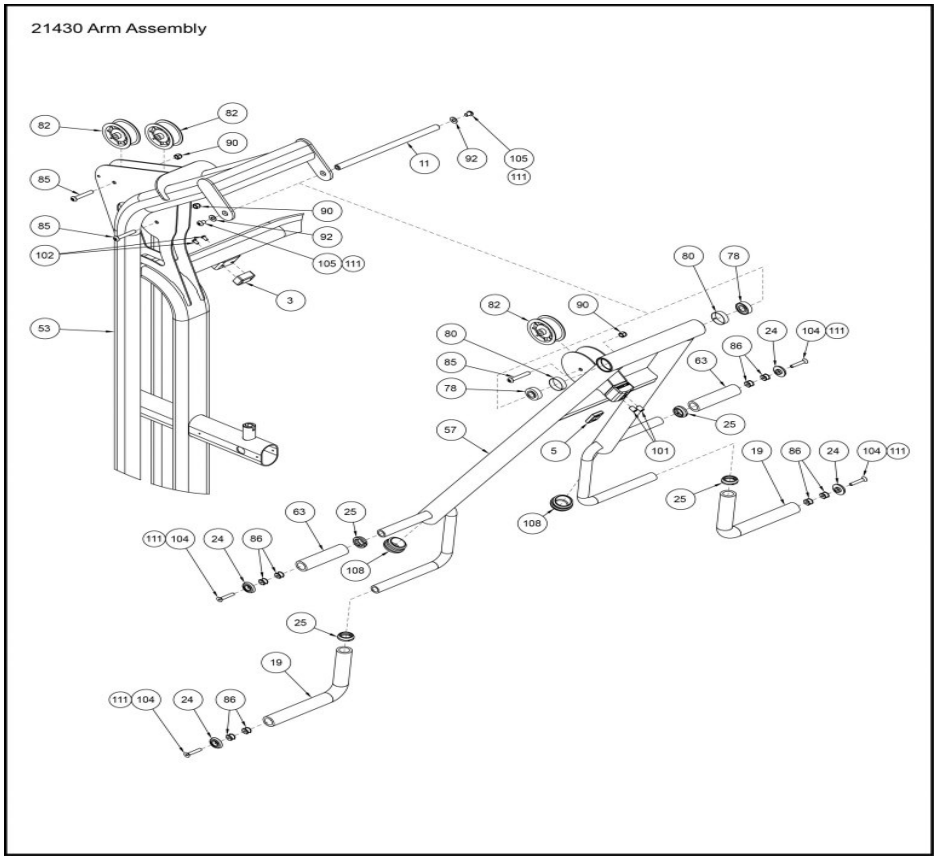

Ref #	Part Number	Qty	Description
3	11000-384	1	BLOCK STOP
5	11040-301	1	INSERT CLAMP BLOCK
11	12000-337	1	SHAFT PIVOT
19	14030-320	2	Grip 15.19
24	20000-525	4	TRIM RING
25	20000-526	4	TRIM RING
53	21430-200	1	W MAIN FRAME Custom
57	21430-208	1	W INPUT ARM Custom
63	4605-504	2	GRAB GRIP 5.19
78	FB030232	2	BRG RADIAL 17MM ID EXT RACE
80	FC030006	2	TOLERANCE RING 1.575 ID
82	GP000209	3	PULLEY ASSEMBLY-3.50
85	HC700428	3	BHSCS .375-16 X 2.25
86	HF449066	8	INSERT 3/4 X 5/16-18 UNC
90	HN704901	3	LOCKNUT .375-16 NYLON
92	HS347600	1	WASHER SAE .375
101	HY740000	2	SET SCREW
102	JC620412	2	BHSCS .250-20 X .50
104	JC661000	4	FHSCS .312-18 X 1.75 LONG
105	JC700412	2	BHSCS .375-16 X .50
108	PP080226	2	INSERT PLASTIC 2.00 DIA-RIB
111	YA000201	1	ADH THRDLKR REM .02 OZ 242

21430_Belt_Routing

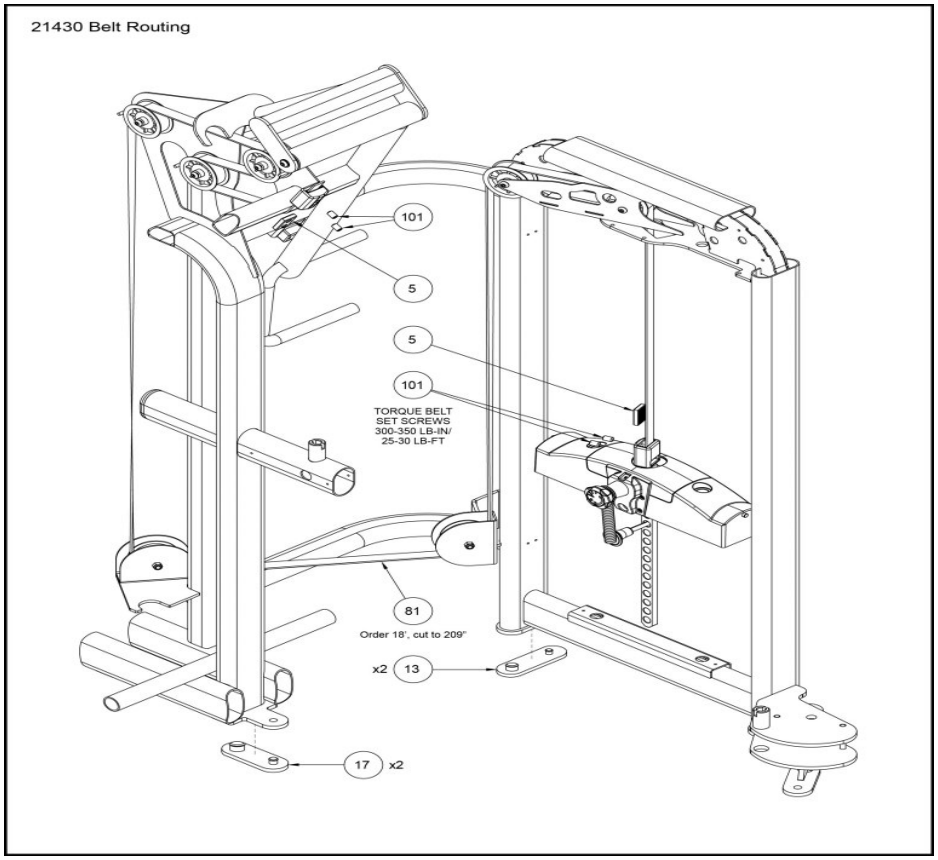

Ref #	Part Number	Qty	Description
5	11040-301	2	INSERT CLAMP BLOCK
13	12090-322	2	PAD FOOT
17	13000-353	2	Foot Pad
81	GB000202	18	BELT .95 WIDE Sold in Ft 1=1ft
101	HY740000	4	SET SCREW

21430_Frame_Assembly

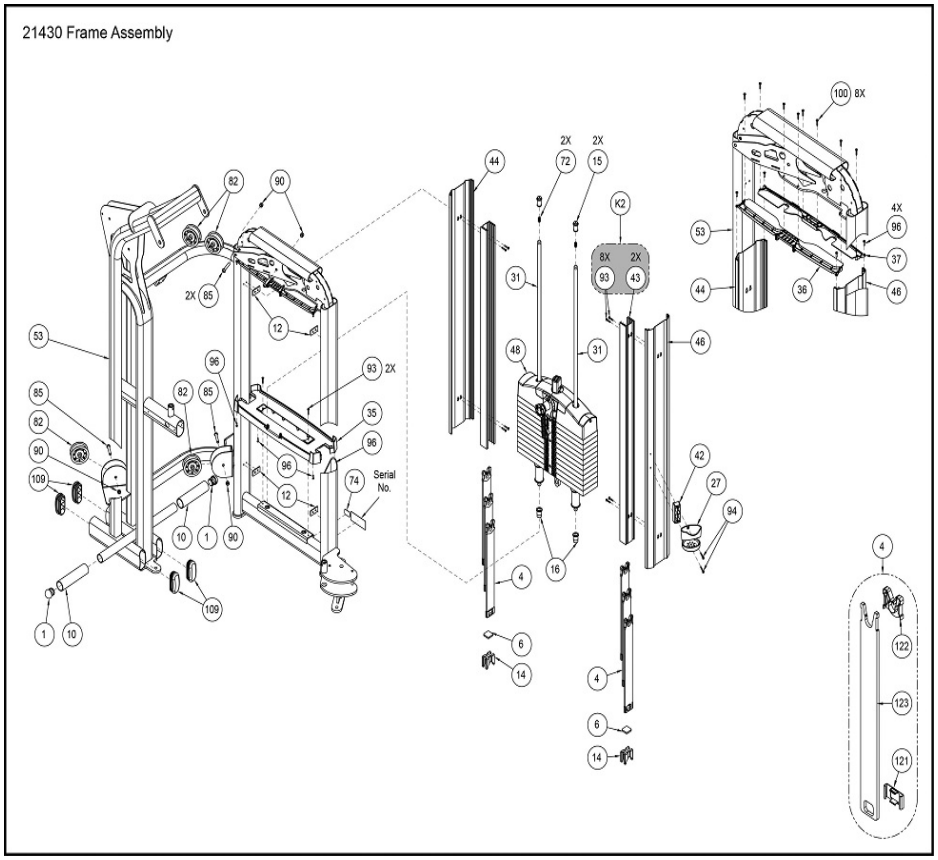

Ref #	Part Number	Qty	Description
1	08001	2	PLUG 1.50
K2	21000K002	1	KIT, SHORT INC WT CHANNEL REPLACEMENT (PRESTIGE)
6	11040-409	2	BUMPER
10	11190-350	2	Grip 7.00
12	12000-398	4	SPACER
14	12102-330	2	INSERT INCREMENT WEIGHT
15	12210-347	2	CAP GUIDE ROD
16	12210-348	2	CAP GUIDE ROD
27	20000-650	1	HOLDER, WATER BOTTLE
31	21000-350	2	WT ROD .625 X 48.22
35	21000-450	1	BOTTOM TRAY
36	21000-451	1	MOUNT, FRONT
37	21000-452	1	MOUNT, BACK
42	21000-465	1	SPACER
43	21000-580	2	EXTRUSION INC WT CHANNEL
44	21000-471	1	EXTRUSION, OUTER CHANNEL
46	21000-473	1	EXTRUSION, OUTER CHANNEL (RH HOLES)
48	21400-011	1	TOP WEIGHT ASSY 15
53	21430-200	1	W MAIN FRAME Custom
72	BS070208	2	COMP SPRING .396 ID X .480 OD X 1.50 LG
74	CM000211	1	DECAL PATENT

Ref #	Part Number	Qty	Description
82	GP000209	4	PULLEY ASSEMBLY-3.50
85	HC700428	3	BHSCS .375-16 X 2.25
90	HN704901	4	LOCKNUT .375-16 NYLON
93	HT512517	2	TAP SC 10-24 X 1.00 TYPE WB PN HD PHIL BLK
94	HT512522	2	TAP SC 10-24 X 1.50 TYPE WB PN
96	HT542514	4	TAP SC NO 8-32 X .625 A PHIL
100	HT552515	8	TAP SC NO. 8-16 X .75 PLASTITE PN HD PHIL BLK
109	PP130002	4	INSERT DOMED PLASTIC
121	11040-572	6	GUARD INCREMENT WEIGHT
122	11040-578	6	GUARD, INCREMENT WEIGHT
123,4	11040-030	12	INCREMENT WEIGHT S/A
-	CM000202	1	DECAL, SERIAL NUMBER

21430_Panel_Assembly

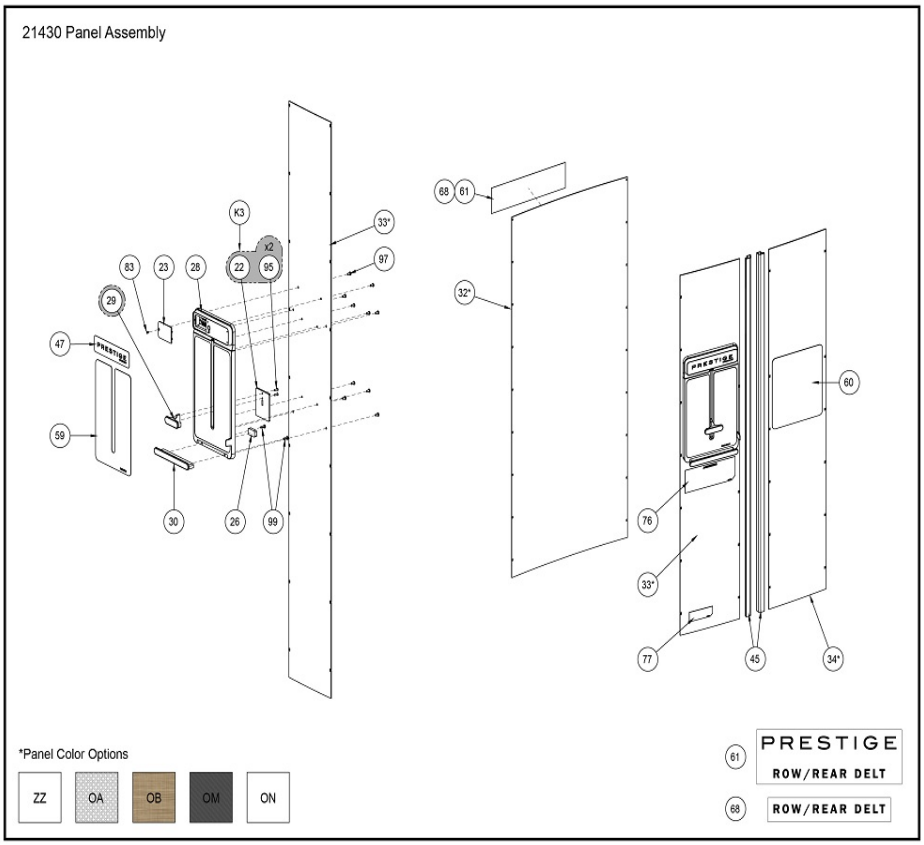

Ref #	Part Number	Qty	Description
K3	20000K007	1	KIT, CLAMP BAR REPLACEMENT
22	20000-483	2	WEIGHT PLATE
23	20000-524	1	COVER PLATE
26	20000-560	1	BUMPER
28	20000-652	1	PANEL, PLACARD
29	20000-662	1	CLAMP BAR
30	20000-655	1	BOTTOM TAB
32	21000-440OB	1	BACK PANEL BALI
32	21000-440ZZ	1	BACK PANEL
32	21000-440OM	1	BACK PANEL MORACO
32	21000-440ON	1	BACK PANEL
32	21000-440OA	1	BACK PANEL ASPEN
33	21000-441ZZ	1	FRONT PANEL (MEDIA CENTER)
33	21000-441OA	1	FRONT PANEL (MEDIA CENTER) ASPEN
33	21000-441ON	1	FRONT PANEL (MEDIA CENTER)
33	21000-441OB	1	FRONT PANEL (MEDIA CENTER) BALI
33	21000-441OM	1	FRONT PANEL (MEDIA CENTER) MORACO
34	21000-442OB	1	FRONT PANEL BALI
34	21000-442OA	1	FRONT PANEL ASPEN
34	21000-442ON	1	FRONT PANEL
34	21000-442ZZ	1	FRONT PANEL
34	21000-442OM	1	FRONT PANEL MORACO

Ref #	Part Number	Qty	Description
45	21000-472	2	EXTRUDED GUARD
47	21000-556	1	MEDIA CENTER DECAL
59	21430-598	1	Placard Prestige Row TA Custom
60	21430-599	1	Placard Prestige Row TA Custom
61	21430-701	1	DECAL, ROW/REAR DELT
61	21430-700	1	DECAL, ROW/REAR DELT
68	21430-703	1	DECAL, ROW/REAR DELT BLACK
68	21430-704	1	DECAL, ROW/REAR DELT SILVER
76	DE000023	1	Decal Warning Custom
77	DE000025	1	NLA: DECAL, MADE IN U.S.A.
83	HC041008	1	SCREW, FH PHILL. #4 X .250 TYPE AB
95	HT532712	2	FLAT HEAD PHILLIPS #6 X .500 LG TYPE AB
97	HT552509	10	TAP SC NO 8-16 X .31 PLASTITE PN HD PHIL
99	HT552512	2	TAP SC NO. 8-16 X .50 PLASTITE PAN HEAD PHILLIPS BLACK

21430_Seat_Assembly

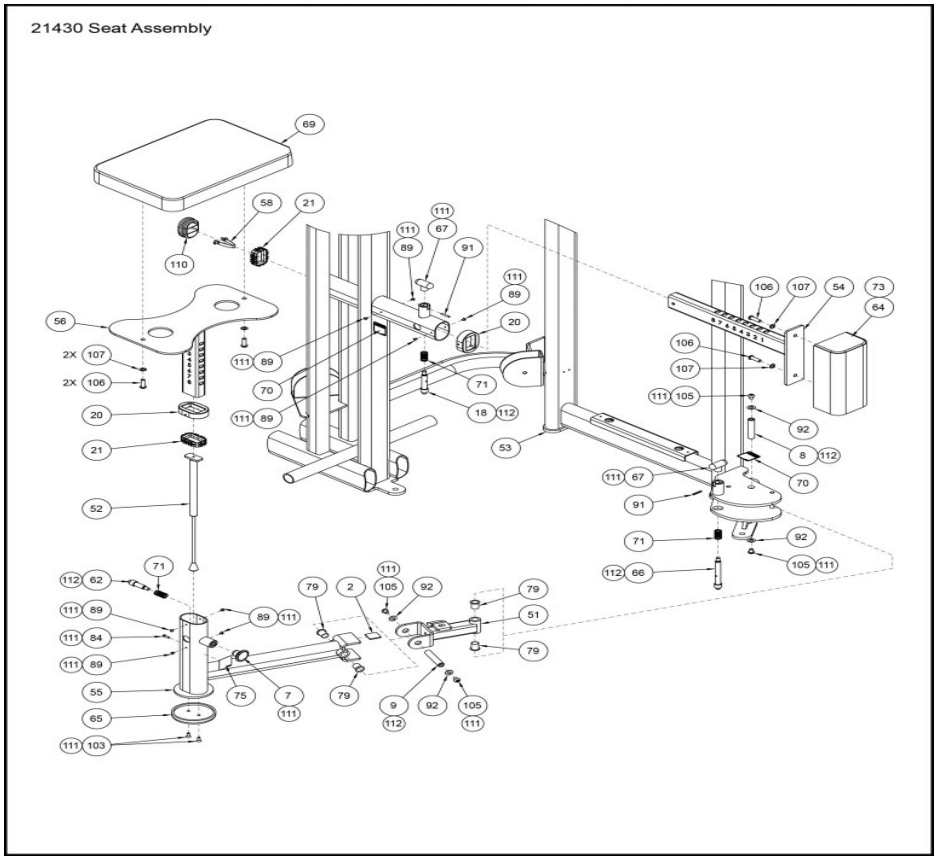

Ref #	Part Number	Qty	Description
2	08171	1	SHIM TAPERED RUBBER
7	11040-440	1	KNOB
8	11050-374	1	PIN PIVOT
9	11050-375	1	PIN PIVOT
18	14030-319	1	Pin Detent
20	16060-316	1	PLASTIC GUIDE
21	16060-317	1	PLASTIC GUIDE
51	21400-208	1	W/ PIVOT ARM Custom
52	21430-103	1	GAS SPRING ASSEMBLY
53	21430-200	1	W MAIN FRAME Custom
54	21430-202	1	P/ PAD ADJUSTING BRACKET
55	21430-203	1	W/ SEAT POST Custom
56	21430-204	1	P/ SEAT POST
58	21430-322	1	DOUBLE END SNAP BUTTON
62	4505-329	1	PIN DETENT
64	[redacted]	1	COVERED CUSHION Custom
65	4816-327	1	PAD FOOT
66	4816-332	1	PIN DETENT
67	4816-336	2	KNOB PLASTIC T-SHAPE
69	5207S043-0	1	CUSHION SA 12 X 18 Custom
70	8500-025	1	DECAL CAUTION Custom
71	BS070201	3	COM SPRING .56 ID X .66 OD X 1.50 LG

Ref #	Part Number	Qty	Description
73	4800-095	1	WEAR COVER Custom
75	DE000019	1	Decal Caution Custom
79	FB130207	4	BRG FLG 17MM X 19MM X 25MM
84	HC572814	1	SHCS .190-10-24 X .625
89	HM583208	4	SCREW,10-32X.25,TRHD PHIL
91	HP286819	1	SPIRAL PIN .188 X 1.12
92	HS347600	2	WASHER SAE .375
103	JC620914	2	FHSCS .250-20 UNC X .625
105	JC700412	2	BHSCS .375-16 X .50
106	JC700420	4	BHSCS .375-16 X 1.25
107	JS347400	4	LOCKWASHER INT TOOTH .375
110	PP130007	1	Insert Plastic
111	YA000201	1	ADH THRDLKR REM .02 OZ 242

21430_Top_Plastic_Detail

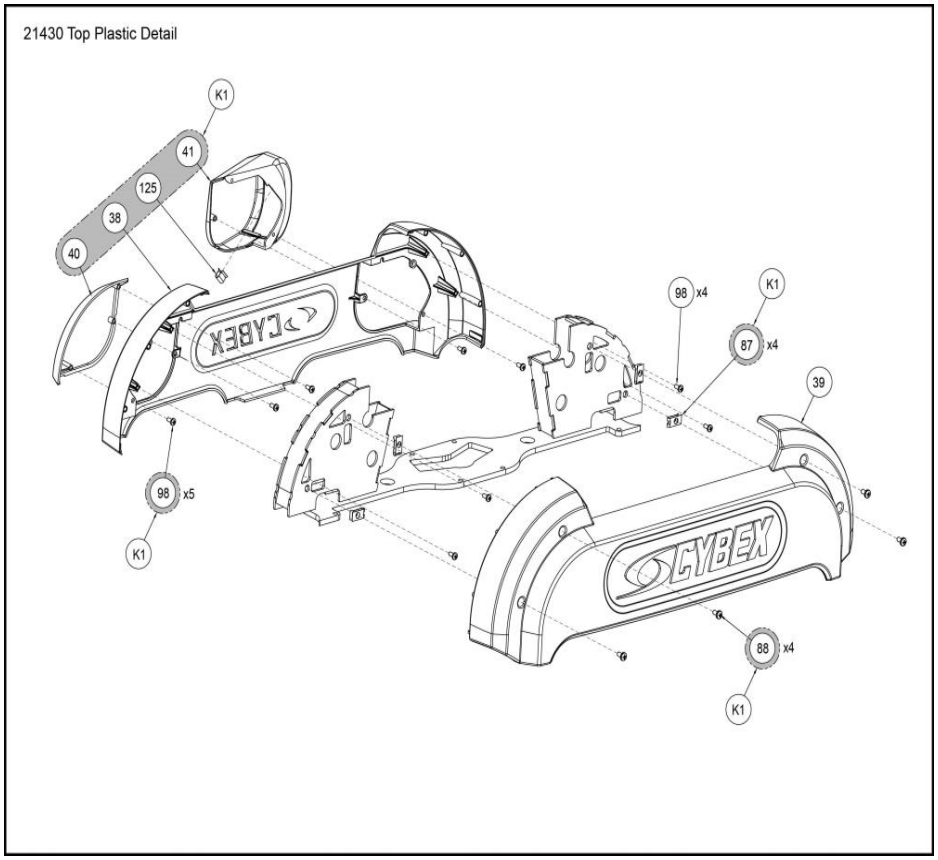

Ref #	Part Number	Qty	Description
K1	21000K041	1	KIT, PRESTIGE TOP CAP (LH EXIT)
38	21000-454	1	TOP CAP, FRONT
39	21000-455	1	TOP CAP, REAR
40	21000-460	1	TOP CAP INSERT RH
41	21000-462	1	PULLEY COVER ASSEMBLY LH
87	HF579000	4	PANEL FASTENER 10-24 U TYPE
88	HJ582510	4	SEMS 10-32 X .38
98	HT552511	9	TAP SC #8-16 X .38 TAP BLACK PLASTITE
125	HF009000	1	SPEED CLIP U-TYPE

21430_Weight_Stack_Detail

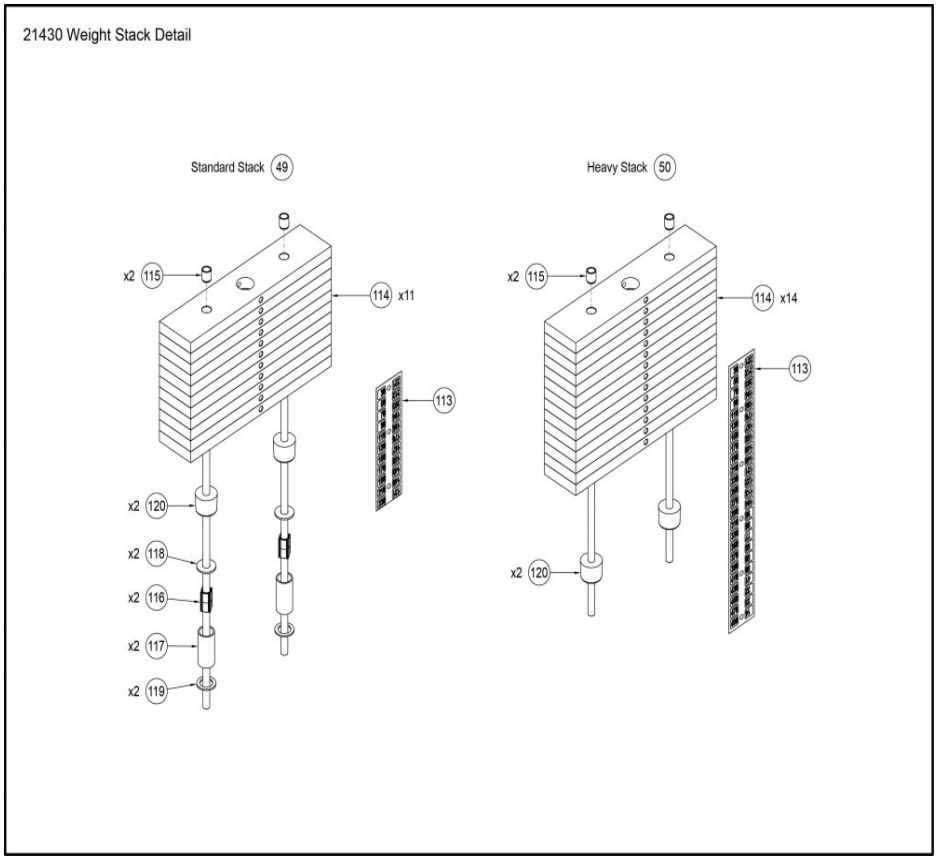

Ref #	Part Number	Qty	Description
49	21400-020	1	REGULAR WEIGHT STACK
50	21400-021	1	HEAVY WEIGHT STACK
113	14000-401	1	DECAL, WT PLATE TA
114	4000C101	1	C STACK WT 4X18
115	FB130216	2	Bushing Weight Stack
116	12210-352	2	INSERT PLASTIC
117	12210-351	2	TUBE SPACER
118	HS760106	2	WASH FLAT 1.750 .688 .140 T
119	JS497600	2	WASHER 1.19 ID X 1.75 OD X .12 THK
120	PR060005	2	BUMPER WEIGHT