Prestige Chest Press TA

21400-10

Parts Manual

5/22/2021 9:41:26 AM

LifeFitness

WHAT WE LIVE FOR

Table of Contents

Top_Weight_Assembly_15_21400-012....3
21400_Arm_Assembly....5
21400_Belt_Routing....7
21400_Frame_Assembly....8
21400_Panel_Assembly....10
21400_Pulley_Assembly....12
21400_Seat_Pivot_Assembly....13
21400_Top_Plastic_Detail....15
21400_Weight_Stack_Detail....16

Top_Weight_Assembly_15_21400-012

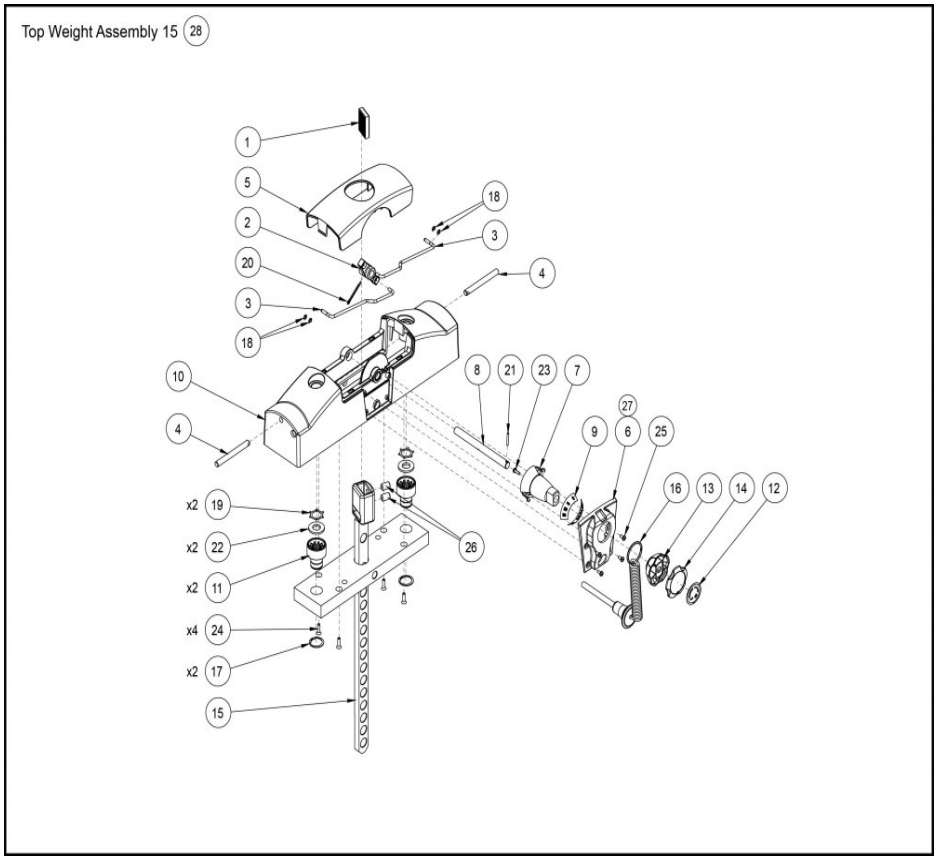

Ref #	Part Number	Qty	Description
1	11040-301	1	INSERT CLAMP BLOCK
2	11040-367	1	HUB MOLDED
3	11040-369	2	ROD LINKAGE
4	11040-370	2	PIN
5	11040-416	1	COVER TOP WEIGHT
6	11040-424	1	COVER PLATE
7	11040-426	1	STEM
8	11040-427	1	ROD
9	11040-428	1	DECAL ADJUSTMENT
10	11050-366	1	TOP WT ASSY, MOLDED
11	13000-364	2	BEARING FLNG .62 ID X .92 OD X 1.75 LG
12	14051-308	1	Decal Rotation
13	20000-476	1	KNOB, BASE
14	20000-477	1	KNOB
15	21000-232	1	C LIFTING POST 15
16	BH030207	1	PIN WEIGHT SELECTOR
17	BR030206	1	RETAINING RING
18	BR030209	4	RETAINING RING .188
19	BR030220	2	RETAINING RING 1.250 INTERNAL
20	HP016820	1	COTTER PIN .125 X 1.25
21	HP266765	1	ROLL PIN .125 X .938
22	HS720004	2	WASHER FELT .641 ID X 1.250 OD X .125 T

Ref #	Part Number	Qty	Description
23	HT552512	1	TAP SC NO. 8-16 X .50 PLASTITE PAN HEAD PHILLIPS BLACK
24	HT562715	4	TAP SC NO 10 X .750 F PHIL
25	HT582510	4	TAP SC NO 10 X .375 PN HD PHIL
26	HY740000	2	SET SCREW
28	21400-012	1	TOP WEIGHT ASSY 15

21400_Arm_Assembly

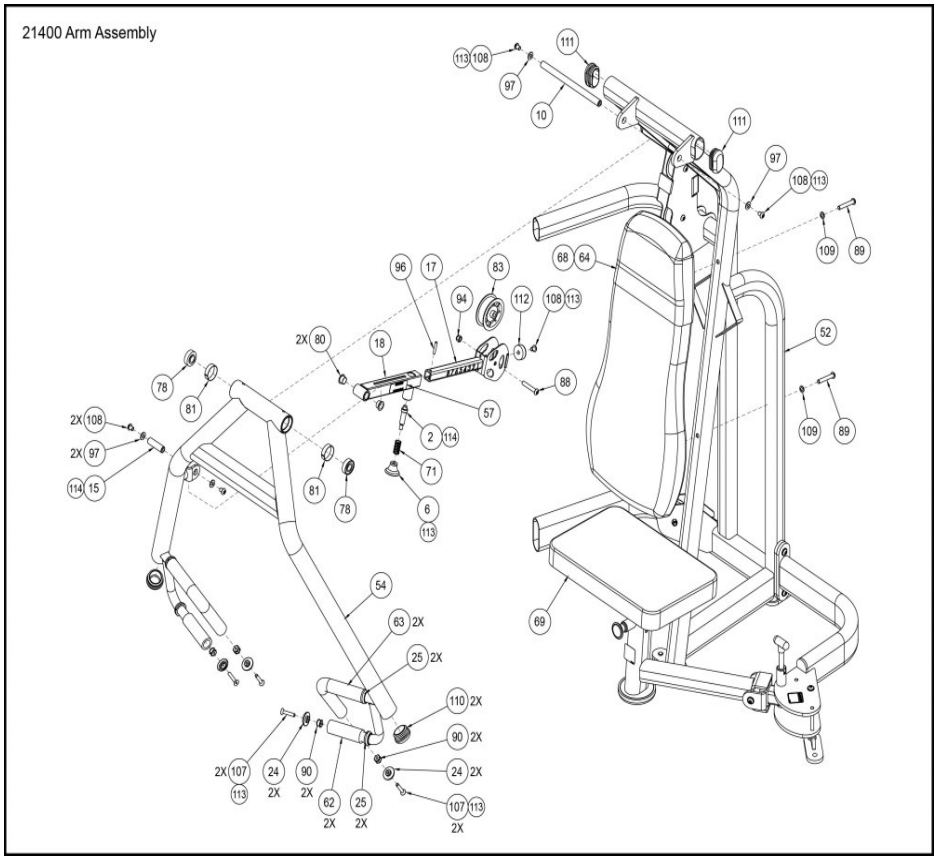

Ref #	Part Number	Qty	Description
2	08229	1	P PIN DETENT
6	11040-440	1	KNOB
10	12090-303	1	SHAFT PIVOT
15	13000-336	1	Pin Pivot
17	14000-202	1	W/TELESCOPING PULLEY TUBE
18	14000-203	1	W/TELESCOPING TUBE
24	20000-525	4	TRIM RING
25	20000-526	4	TRIM RING
52	21400-200	1	W/ FRAME Custom
54	21400-204	1	W/ INPUT Custom
57	21400-325	1	Decal Caution Custom
62	4605-514	2	GRAB GRIP 4.50
63	4605-522	2	GRAB GRIP 12.75
64	[redacted]	1	COVERED CUSHION SA BACK 32 MOLDED Custom
68	[redacted]	1	WEAR COVER SA 32in MOLDED Custom
69	5207S043-0	1	CUSHION SA 12 X 18 Custom
71	BS070201	1	COM SPRING .56 ID X .66 OD X 1.50 LG
78	FB030232	2	BRG RADIAL 17MM ID EXT RACE
80	FB130211	2	BRG FLG 17MM X 19MM X 12MM
81	FC030006	2	TOLERANCE RING 1.575 ID
83	GP000209	1	PULLEY ASSEMBLY-3.50
88	HC700428	1	BHSCS .375-16 X 2.25

Ref #	Part Number	Qty	Description
89	HC700430	2	BHSCS .375-16 X 2.50
90	HF449066	4	INSERT 3/4 X 5/16-18 UNC
94	HN704901	1	LOCKNUT .375-16 NYLON
96	HP306720	1	PIN COILED .25 X 1.25
97	HS347600	2	WASHER SAE .375
107	JC661000	4	FHSCS .312-18 X 1.75 LONG
108	JC700412	2	BHSCS .375-16 X .50
109	JS347400	2	LOCKWASHER INT TOOTH .375
110	PP080226	2	INSERT PLASTIC 2.00 DIA-RIB
111	PP130003	2	INSERT PLASTIC
112	PR060003	1	BUMPER RECESS
113	YA000201	1	ADH THRDLKR REM .02 OZ 242

21400_Belt_Routing

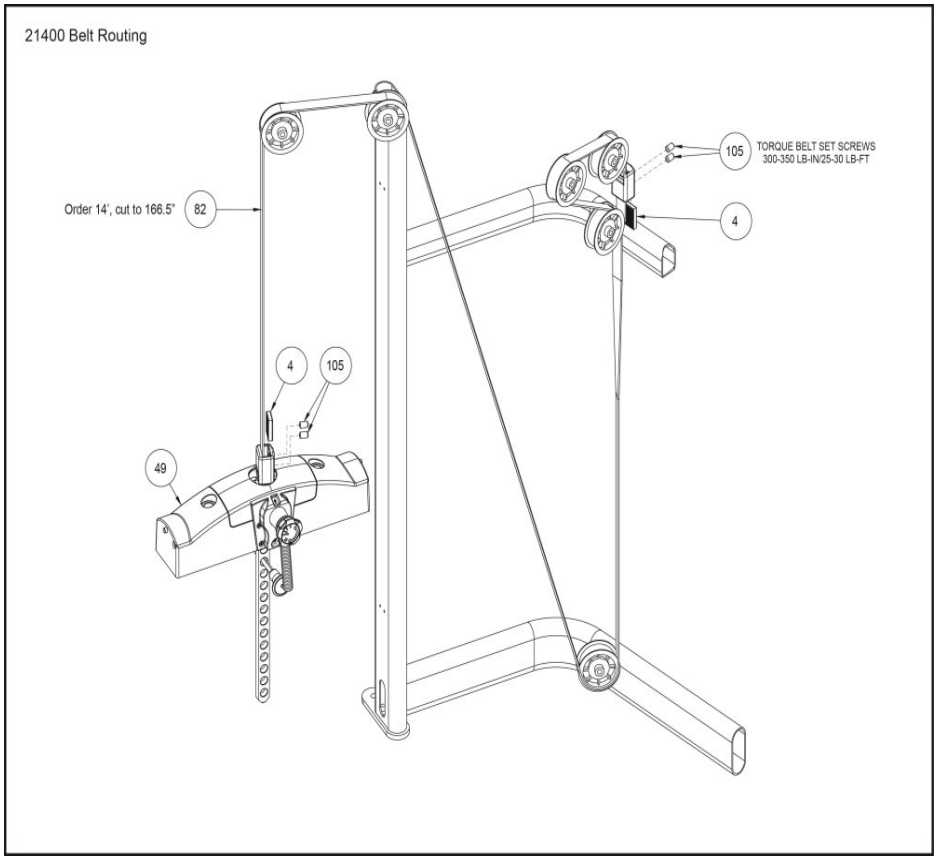

Ref #	Part Number	Qty	Description
4	11040-301	2	INSERT CLAMP BLOCK
49	21400-012	1	TOP WEIGHT ASSY 15
82	GB000202	14	BELT .95 WIDE Sold in Ft 1=1ft
105	HY740000	4	SET SCREW

21400_Frame_Assembly

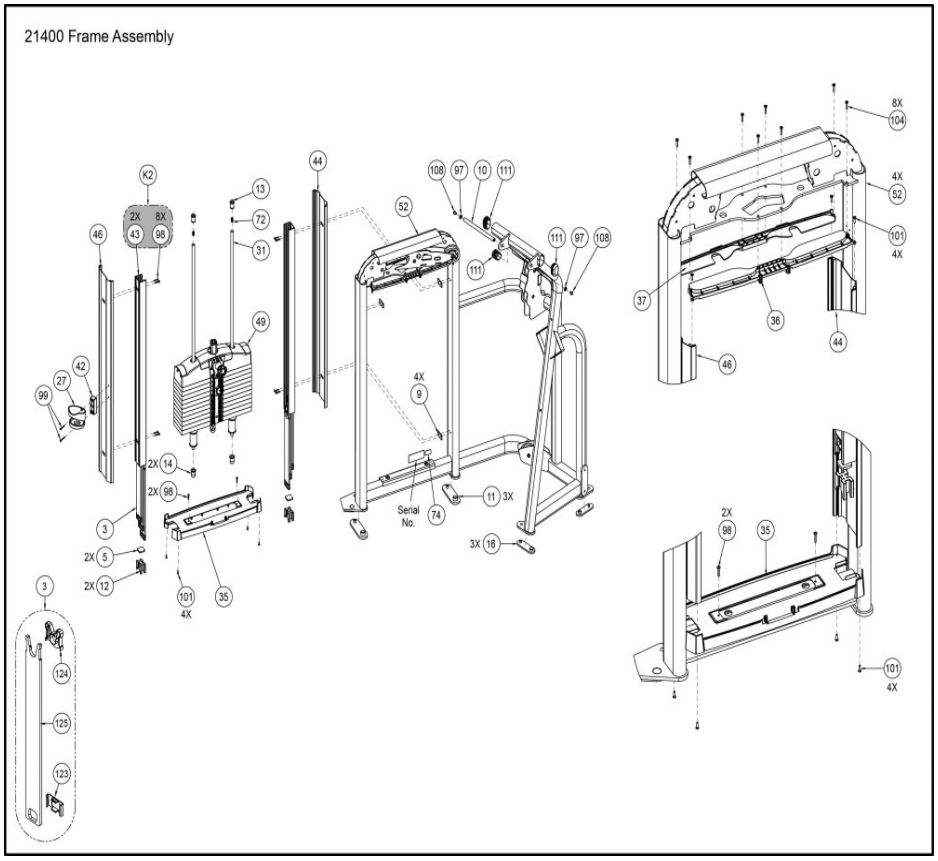

Ref #	Part Number	Qty	Description
K2	21000K002	1	KIT, SHORT INC WT CHANNEL REPLACEMENT (PRESTIGE)
5	11040-409	2	BUMPER
9	12000-398	4	SPACER
10	12090-303	1	SHAFT PIVOT
11	12090-322	3	PAD FOOT
12	12102-330	2	INSERT INCREMENT WEIGHT
13	12210-347	2	CAP GUIDE ROD
14	12210-348	2	CAP GUIDE ROD
16	13000-353	3	Foot Pad
27	20000-650	1	HOLDER, WATER BOTTLE
31	21000-350	2	WT ROD .625 X 48.22
35	21000-450	1	BOTTOM TRAY
36	21000-451	1	MOUNT, FRONT
37	21000-452	1	MOUNT, BACK
42	21000-465	1	SPACER
43	21000-580	1	EXTRUSION INC WT CHANNEL
44	21000-471	1	EXTRUSION, OUTER CHANNEL
46	21000-474	1	EXTRUSION, OUTER CHANNEL (LH HOLES)
49	21400-012	1	TOP WEIGHT ASSY 15
52	21400-200	1	W/ FRAME Custom
72	BS070208	2	COMP SPRING .396 ID X .480 OD X 1.50 LG

Ref #	Part Number	Qty	Description
74	CM000211	1	DECAL PATENT
97	HS347600	2	WASHER SAE .375
98	HT512517	2	TAP SC 10-24 X 1.00 TYPE WB PN HD PHIL BLK
99	HT512522	2	TAP SC 10-24 X 1.50 TYPE WB PN
101	HT542514	4	TAP SC NO 8-32 X .625 A PHIL
104	HT552515	8	TAP SC NO. 8-16 X .75 PLASTITE PN HD PHIL BLK
108	JC700412	2	BHSCS .375-16 X .50
111	PP130003	2	INSERT PLASTIC
123	11040-572	6	GUARD INCREMENT WEIGHT
124	11040-578	6	GUARD, INCREMENT WEIGHT
125,3	11040-030	12	INCREMENT WEIGHT S/A
-	CM000202	1	DECAL, SERIAL NUMBER

21400_Panel_Assembly

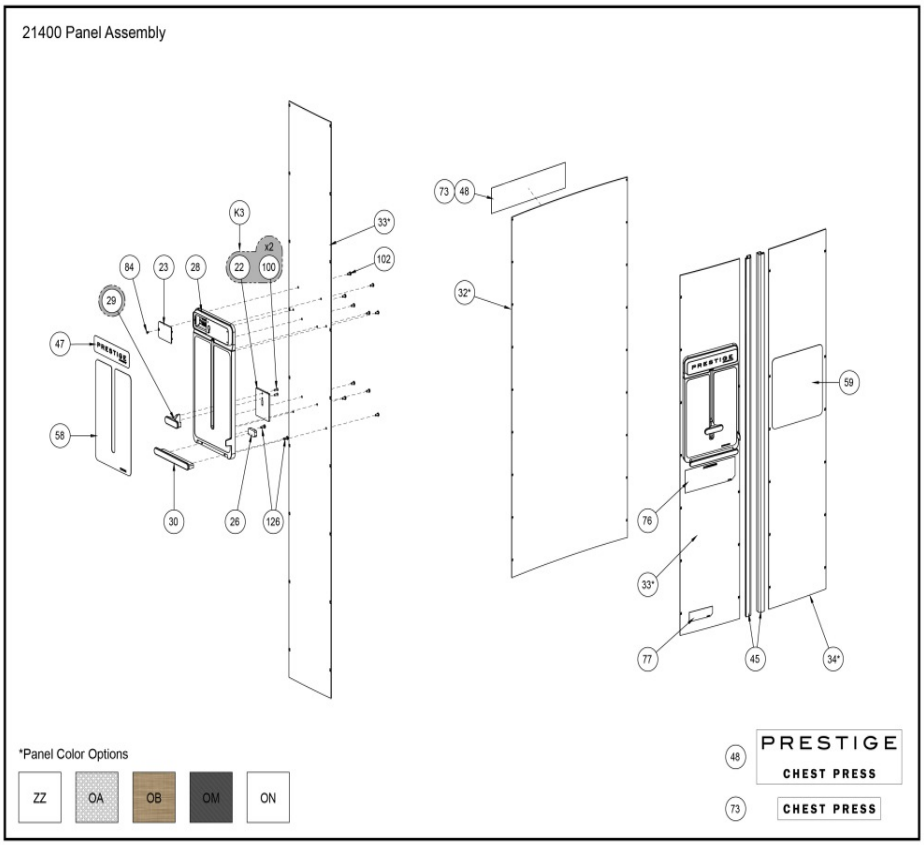

Ref #	Part Number	Qty	Description
K3	20000K007	1	KIT, CLAMP BAR REPLACEMENT
22	20000-483	1	WEIGHT PLATE
23	20000-524	1	COVER PLATE
26	20000-560	1	BUMPER
28	20000-652	1	PANEL, PLACARD
29	20000-662	1	CLAMP BAR
30	20000-655	1	BOTTOM TAB
32	21000-440OM	1	BACK PANEL MORACO
32	21000-440ON	1	BACK PANEL
32	21000-440OA	1	BACK PANEL ASPEN
32	21000-440ZZ	1	BACK PANEL
32	21000-440OB	1	BACK PANEL BALI
33	21000-441ON	1	FRONT PANEL (MEDIA CENTER)
33	21000-441OM	1	FRONT PANEL (MEDIA CENTER) MORACO
33	21000-441OA	1	FRONT PANEL (MEDIA CENTER) ASPEN
33	21000-441OB	1	FRONT PANEL (MEDIA CENTER) BALI
33	21000-441ZZ	1	FRONT PANEL (MEDIA CENTER)
34	21000-442OB	1	FRONT PANEL BALI
34	21000-442OM	1	FRONT PANEL MORACO
34	21000-442ZZ	1	FRONT PANEL
34	21000-442OA	1	FRONT PANEL ASPEN
34	21000-442ON	1	FRONT PANEL

Ref #	Part Number	Qty	Description
45	21000-472	2	EXTRUDED GUARD
47	21000-556	1	MEDIA CENTER DECAL
48	21000-701	1	DECAL, CHEST PRESS
48	21000-700	1	DECAL, CHEST PRESS
58	21400-598	1	Placard Prestig ChestP TA Custom
59	21400-599	1	Placard Prestig ChestP TA Custom
73	20000-703	1	DECAL, CHEST PRESS, BLACK
73	20000-704	1	DECAL, CHEST PRESS, SILVER
76	DE000023	1	Decal Warning Custom
77	DE000025	1	NLA: DECAL, MADE IN U.S.A.
84	HC041008	1	SCREW, FH PHILL. #4 X .250 TYPE AB
100	HT532712	2	FLAT HEAD PHILLIPS #6 X .500 LG TYPE AB
102	HT552509	10	TAP SC NO 8-16 X .31 PLASTITE PN HD PHIL
126	HT552512	2	TAP SC NO. 8-16 X .50 PLASTITE PAN HEAD PHILLIPS BLACK

21400_Pulley_Assembly

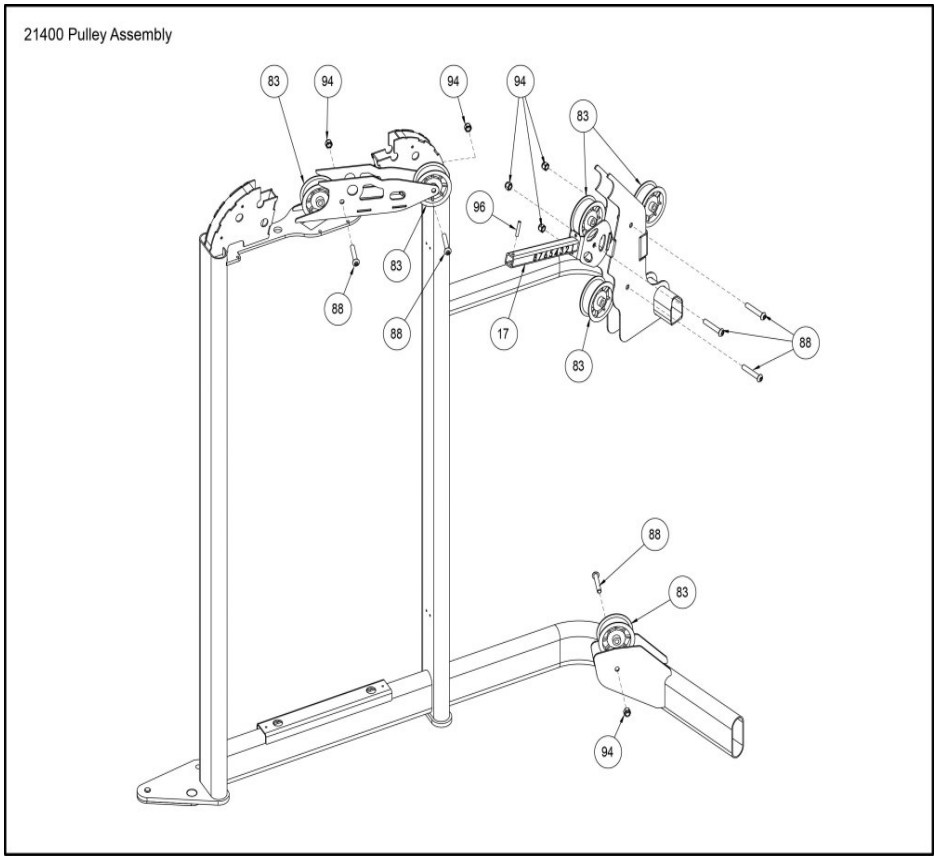

Ref #	Part Number	Qty	Description
17	14000-202	1	W/TELESCOPING PULLEY TUBE
83	GP000209	5	PULLEY ASSEMBLY-3.50
88	HC700428	5	BHSCS .375-16 X 2.25
94	HN704901	6	LOCKNUT .375-16 NYLON
96	HP306720	1	PIN COILED .25 X 1.25

21400_Seat_Pivot_Assembly

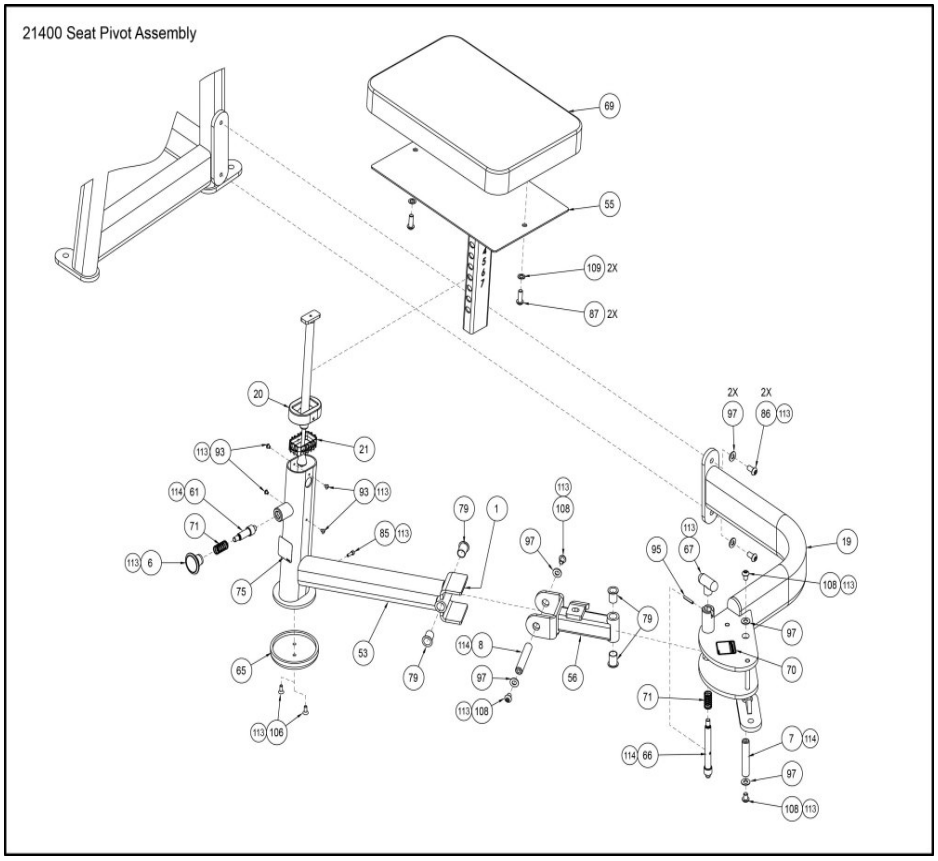

Ref #	Part Number	Qty	Description
1	08171	1	SHIM TAPERED RUBBER
6	11040-440	1	KNOB
7	11050-374	1	PIN PIVOT
8	11050-375	1	PIN PIVOT
19	14000-207	1	W Bracket
20	16060-316	1	PLASTIC GUIDE
21	16060-317	1	PLASTIC GUIDE
53	21400-201	1	W/ SEAT PIVOT Custom
55	21400-205	1	P/ CUSHION POST
56	21400-208	1	W/ PIVOT ARM Custom
61	4505-329	1	PIN DETENT
65	4816-327	1	PAD FOOT
66	4816-332	1	PIN DETENT
67	4816-336	1	KNOB PLASTIC T-SHAPE
69	5207S043-0	1	CUSHION SA 12 X 18 Custom
70	8500-025	1	DECAL CAUTION Custom
71	BS070201	2	COM SPRING .56 ID X .66 OD X 1.50 LG
75	DE000019	1	Decal Caution Custom
79	FB130207	4	BRG FLG 17MM X 19MM X 25MM
85	HC572814	1	SHCS .190-10-24 X .625
86	HC700415	2	BHSCS .375-16 X .75
87	HC700417	2	BHSCS .375-16 X 1.00

Ref #	Part Number	Qty	Description
93	HM583208	4	SCREW,10-32X.25,TRHD PHIL
95	HP286819	1	SPIRAL PIN .188 X 1.12
97	HS347600	2	WASHER SAE .375
106	JC620914	2	FHSCS .250-20 UNC X .625
108	JC700412	4	BHSCS .375-16 X .50
109	JS347400	2	LOCKWASHER INT TOOTH .375
113	YA000201	1	ADH THRDLKR REM .02 OZ 242

21400_Top_Plastic_Detail

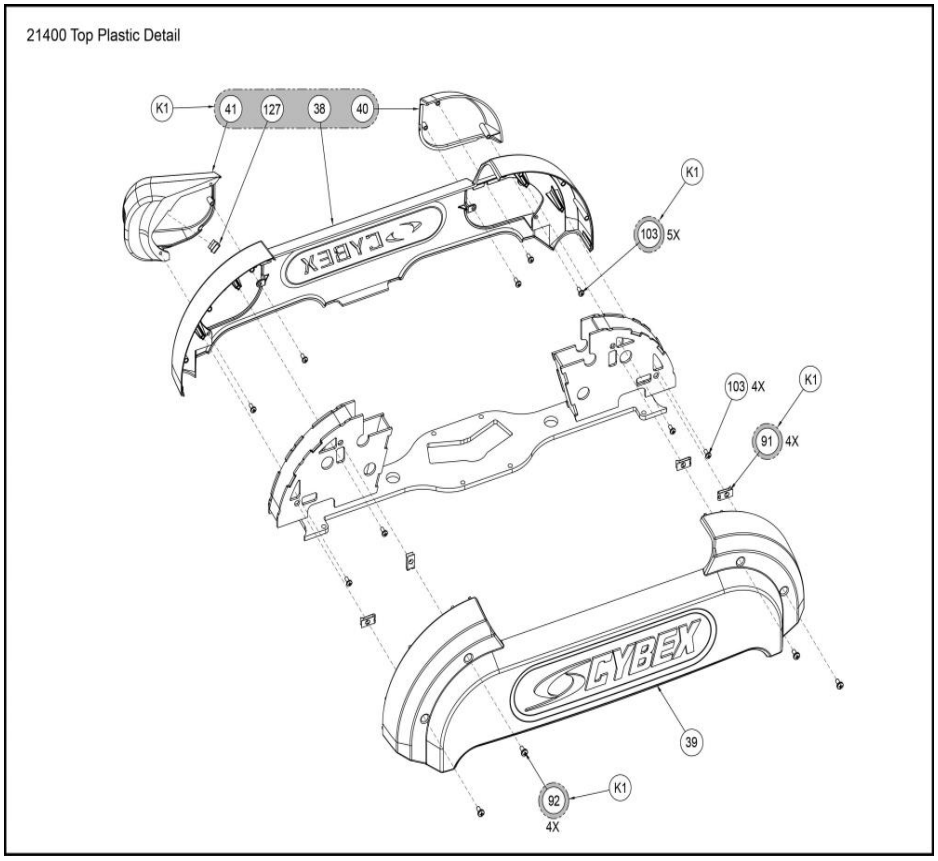

Ref #	Part Number	Qty	Description
K1	21000K040	1	KIT, PRESTIGE TOP CAP (RH EXIT)
38	21000-454	1	TOP CAP, FRONT
39	21000-455	1	TOP CAP, REAR
40	21000-457	1	TOP CAP INSERT LH
41	21000-459	1	PULLEY COVER ASSEMBLY RH
91	HF579000	4	PANEL FASTENER 10-24 U TYPE
92	HJ582510	4	SEMS 10-32 X .38
103	HT552511	4	TAP SC #8-16 X .38 TAP BLACK PLASTITE
127	HF009000	1	SPEED CLIP U-TYPE

21400_Weight_Stack_Detail

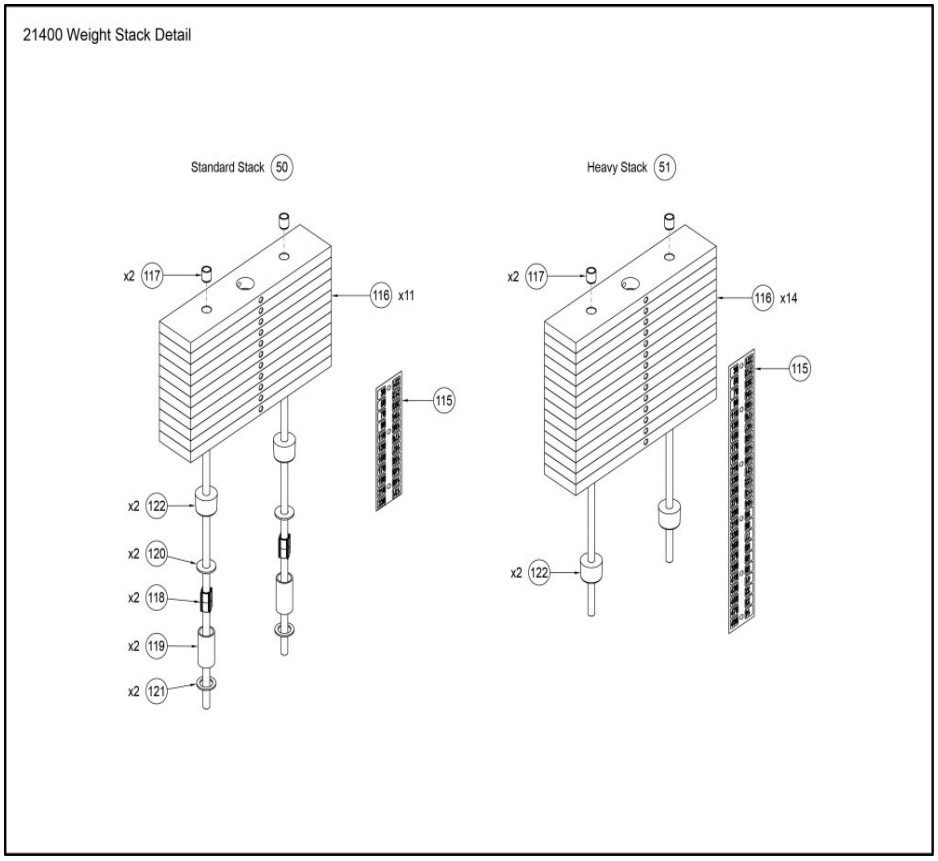

Ref #	Part Number	Qty	Description
50	21400-020	1	REGULAR WEIGHT STACK
51	21400-021	1	HEAVY WEIGHT STACK
115	14000-401	1	DECAL, WT PLATE TA
116	4000C101	1	C STACK WT 4X18
117	FB130216	2	Bushing Weight Stack
118	12210-352	2	INSERT PLASTIC
119	12210-351	2	TUBE SPACER
120	HS760106	2	WASH FLAT 1.750 .688 .140 T
121	JS497600	2	WASHER 1.19 ID X 1.75 OD X .12 THK
122	PR060005	2	BUMPER WEIGHT