16110 Leg Press
Main Assembly

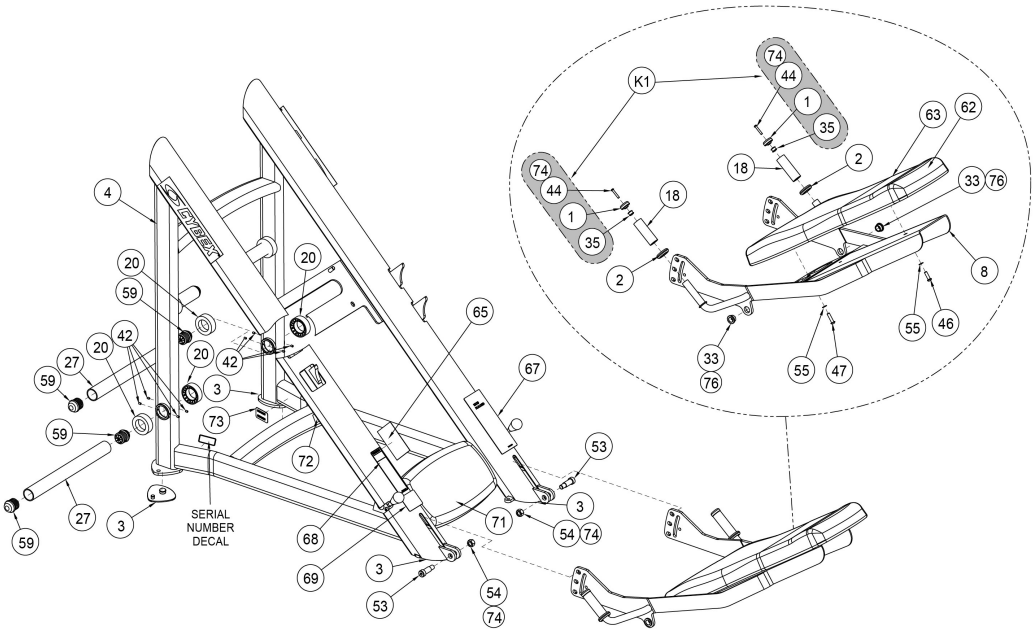

1	11090-374	END CAP	
2	11090-376	RING, HANDLE GRIP	
3	16010-311	FOOT PAD	
4	16110-200	W MAIN FRAME	
8	16110-213	W SEAT BACK	
18	4605-509	GRAB GRIP 4.00	
20	5220-367	SPACER, PLASTIC	
27	5330P029	PLATED WEIGHT TUBE (19.00)	
33	HB-60008	BEARING FLUSH OILITE	
35	HF449063	INSERT 3/4 X 1/4-20	
42	HY622910	SET SC .250-20 X .375	
44	JC620422	BHSCS .250-20 x 1.50	
46	JC700420	BHSCS .375-16 X 1.25	
47	JC700422	BHSCS .375-16 X 1.50	
53	JD403348	SHOULDER BOLT .750 X 1.50 .625-11	
54	JN814200	HEX NUT .625-11	
55	JS347400	LOCKWASHER, INT TOOTH .375	
59	PP130006	INSERT, PLASTIC END	
62	4800-184	BACK PAD W/WEAR COVER	
63	4800-187	BACK PAD WEAR COVER ONLY	
65	5320-336-1	DECAL	GERMAN
65	5320-336-2	DECAL	FRENCH
65	5320-336-3	DECAL	SPANISH
65	5320-336-4	DECAL	ENGLISH
65	5320-336-6	DECAL	JAPANESE
65	5320-336-7	DECAL	SWEDISH
65	5320-336-8	DECAL	RUSSIAN
65	5320-336-A	DECAL	DANISH
65	5320-336-D	DECAL	DUTCH
67	16110-598-1	PLACARD	GERMAN
67	16110-598-2	PLACARD	FRENCH
67	16110-598-3	PLACARD	SPANISH
67	16110-598-4	PLACARD	ENGLISH
67	16110-598-6	PLACARD	JAPANESE
67	16110-598-7	PLACARD	SWEDISH
67	16110-598-8	PLACARD	RUSSIAN
67	16110-598-A	PLACARD	DANISH
67	16110-598-D	PLACARD	DUTCH
68	DE000001-1	DECAL, WARNING	GERMAN
68	DE000001-2	DECAL, WARNING	FRENCH
68	DE000001-3	DECAL, WARNING	SPANISH
68	DE000001-4	DECAL, WARNING	ENGLISH
68	DE000001-6	DECAL, WARNING	JAPANESE
68	DE000001-7	DECAL, WARNING	SWEDISH
68	DE000001-8	DECAL, WARNING	RUSSIAN
68	DE000001-A	DECAL, WARNING	DANISH
68	DE000001-D	DECAL, WARNING	DUTCH
69	DE000002-1	DECAL, WARNING	GERMAN
69	DE000002-2	DECAL, WARNING	FRENCH

69	DE000002-3	DECAL, WARNING	SPANISH
69	DE000002-4	DECAL, WARNING	ENGLISH
69	DE000002-6	DECAL, WARNING	JAPANESE
69	DE000002-7	DECAL, WARNING	SWEDISH
69	DE000002-8	DECAL, WARNING	RUSSIAN
69	DE000002-A	DECAL, WARNING	DANISH
69	DE000002-D	DECAL, WARNING	DUTCH
71	4800-188	SEAT PAD	
72	11040-790	DECAL, MADE IN USA	
73	CM000250	DECAL, WEIGHT CAPACITY	
74	YA000201	ADH, THRDLKR, REM NO. 242	
76	YA000226	LOCTITE #680 .5 MI	
K1	11090K006	KIT, HANDLE END CAPS	

16110 Leg Press
Foot Plate

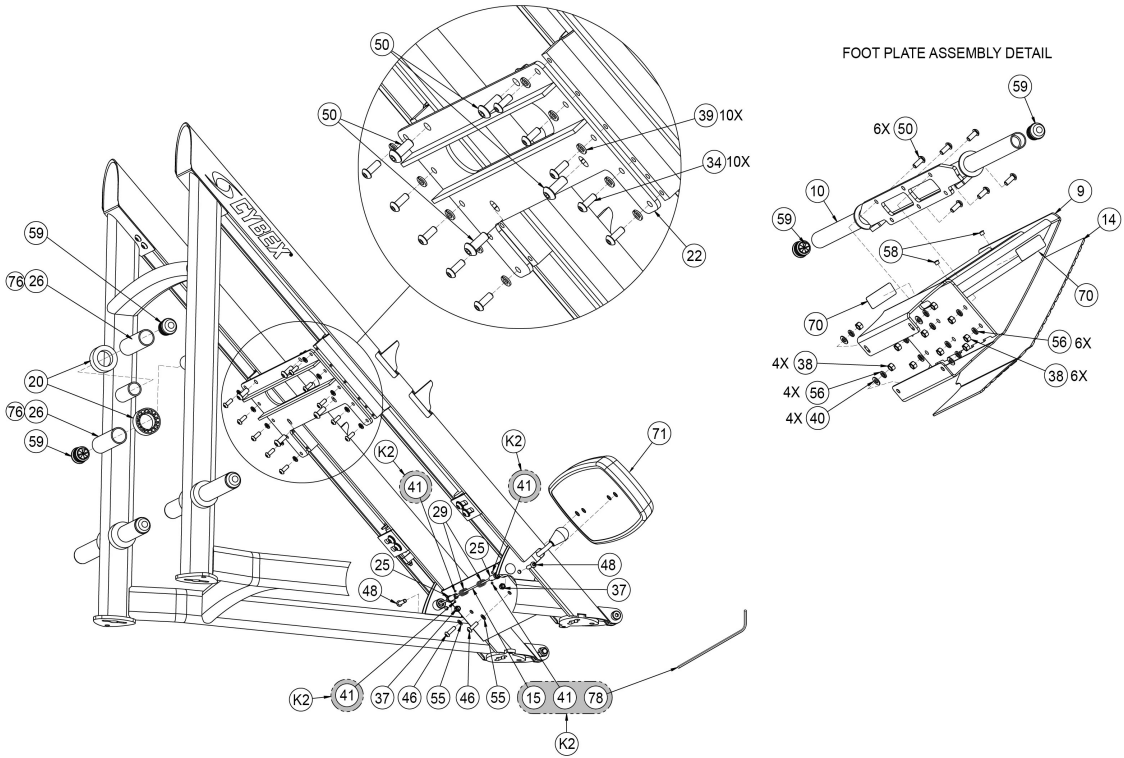

9	16110-215	W SLED	
10	16110-216	PLATED WEIGHT BAR	
14	16110-388	NON-SLIP	
15	16110-389	CABLE	
20	5220-367	SPACER, PLASTIC	
22	5320-205	W SLIDE PLATE	
25	5320P040	PIN DETENT	
26	5330P012	P/WEIGHT TUBE 5.00	
29	BS070201	COM SPRING .56 x .66 1.50 LG	
34	HC700417	BHSCS .375-16 X 1.00	
37	HN704901	LOCKNUT, .375-16 NYLON	
38	HN784000	HEX NUT .500-13	
39	HS348300	LOCKWASHER SPLIT .375	
40	HS387700	WASHER, SAE .500	
41	HY582910	SET SCREW	
46	JC700420	BHSCS .375-16 X 1.25	
48	JC700424	BHSCS .375-16 X 1.75	
50	JC780420	BHSCS .500-13 X 1.25	
55	JS347400	LOCKWASHER, INT TOOTH .375	
56	JS388300	SPLIT LOCKWASHER .500	
58	PP080207	INSERT, PLASTIC .437 DIA 11 GA	
59	PP130006	INSERT, PLASTIC END	
70	5220-337-1	DECAL, WARNING	GERMAN
70	5220-337-2	DECAL, WARNING	FRENCH
70	5220-337-3	DECAL, WARNING	SPANISH
70	5220-337-4	DECAL, WARNING	ENGLISH
70	5220-337-6	DECAL, WARNING	JAPANESE
70	5220-337-7	DECAL, WARNING	SWEDISH
70	5220-337-8	DECAL, WARNING	RUSSIAN
70	5220-337-A	DECAL, WARNING	DANISH
70	5220-337-D	DECAL, WARNING	DUTCH
71	4800-188	SEAT PAD	
76	YA000226	LOCTITE #680 .5 MI	
78	BK030209	HEX KEY .094	
K2	16110K002	KIT, CABLE REPLACEMENT	

16110 Leg Press
Side Rails

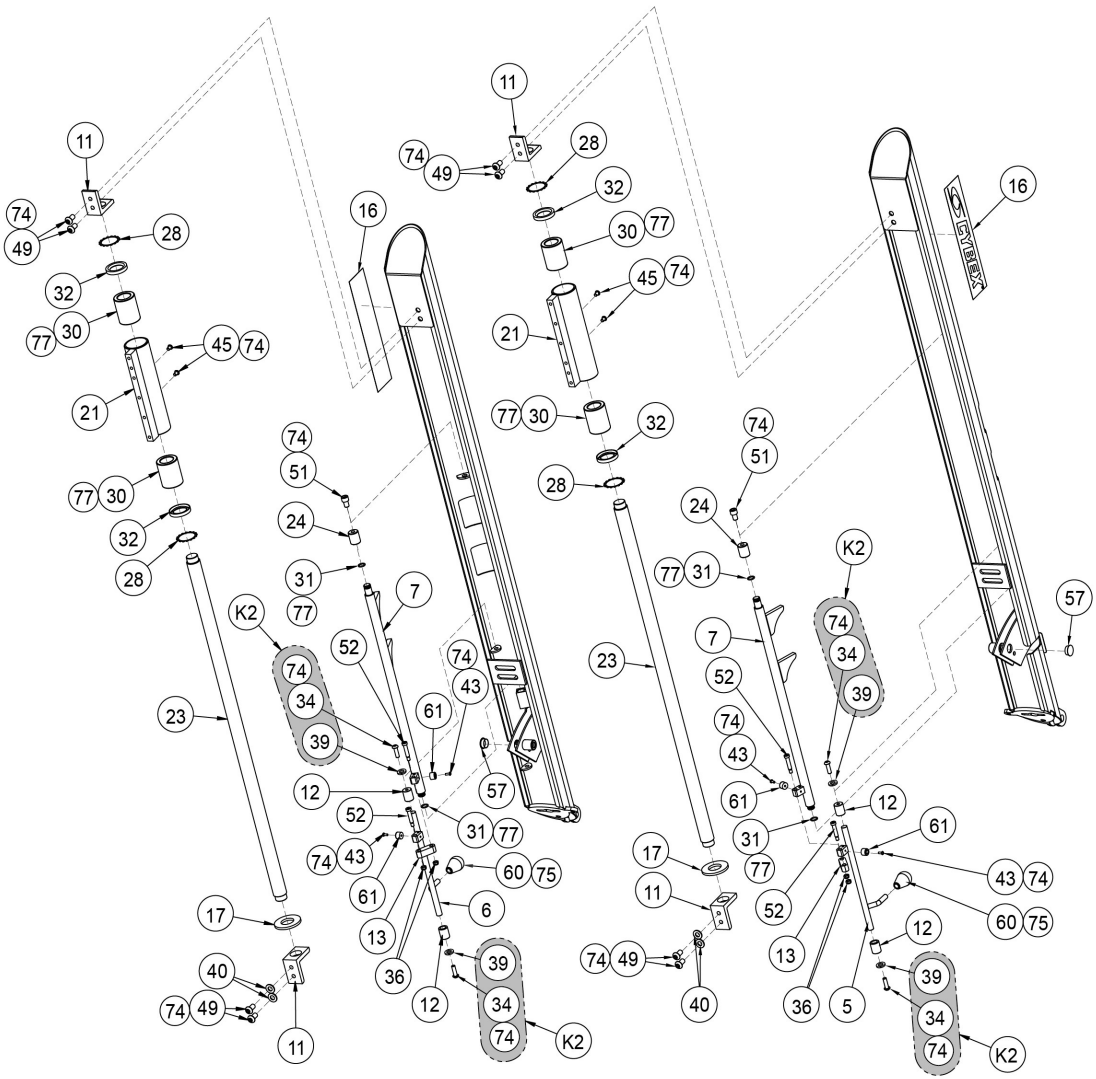

5	16110-210	W/HANDLE-LEFT
6	16110-211	W/HANDLE-RIGHT
7	16110-212	W/STOP ROD
11	16110-351	SHAFT MOUNT
12	16110-357	CAP
13	16110-358	LINK
16	3900-447	DECAL CYBEX 1.94 HOR BLACK
16	3900-448	DECAL CYBEX 1.94 HOR SILVER
17	4540-321	BUMPER, HANDLE
21	5320-204	C BEARING SLEEVE
23	5321-302	SHAFT
24	5320-332	P STOP ROD COLLET
28	BR030203	RETAINING RING
30	FB110200	BRG, LINEAR 1.50
31	FS100006	O-RING (.612 ID X .103 WIDE)
32	FS110200	SEAL, LINEAR BEARING
34	HC700417	BHSCS .375-16 X 1.00
36	HN664900	NUT, HEX SELF-LOCKING .312-18 ZINC
39	HS348300	LOCKWASHER SPLIT .375
40	HS387700	WASHER, SAE .500
43	JC570412	BHSCS .190 10-32 X .375
45	JC660412	BHSCS .312-18 X .50
49	JC780417	BHSCS .500-13 X 1.00
51	JC782815	SHCS .500-13 X .75
52	JD343322	S BOLT .375 X 1.50 .312-18
57	PN660200	INSERT, PLASTIC 1.00 DIA-11 GA
60	PP470006	KNOB, OVAL
61	PR060006	BUMPER, RECESS
74	YA000201	ADH, THRDLKR, REM NO. 242
75	YA000209	ADH BNDG CYANOACRYLATE GEL
77	YG000002	PLEASE USE WHITE LITHIUM GREASE
K2	16110K002	KIT, CABLE REPLACEMENT