18010 Cable Replacement

Kit Number 18010K001 Installation Instructions

This instruction sheet describes how to install the cable for Cybex Bravo Press 18010.

Tools Required

- 1/8” Allen Wrench
- 7/32” Allen Wrench
- 9/16” Open end wrench (2)

Read and understand all instructions thoroughly before installing this kit.

Verify the kit contents shown.

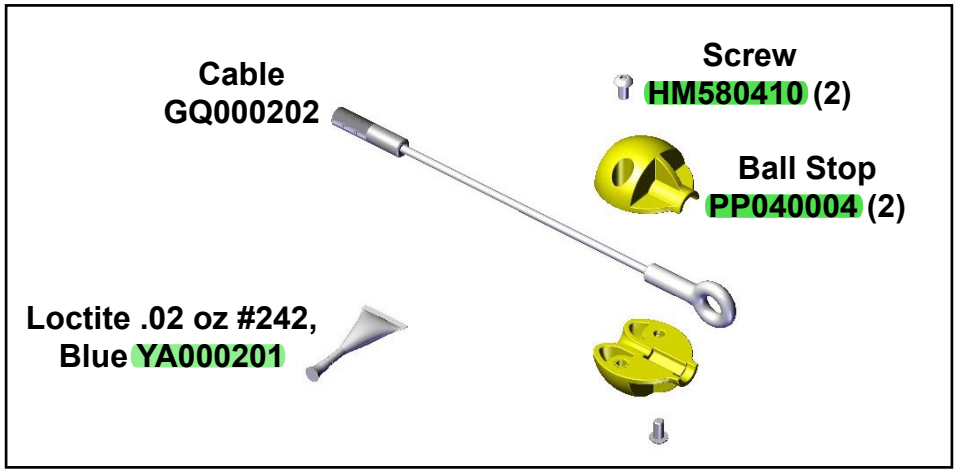

Remove front panel

1. Lift the front panel up and away from frame. Front panel has six tabs that fit into six slots in the frame.

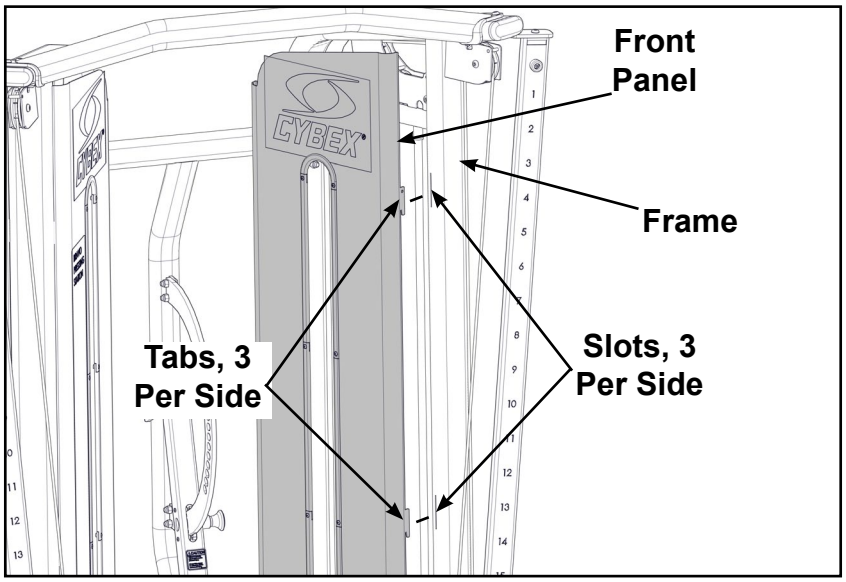

Remove upper pulleys

Remove the four upper pulleys using a 7/32” Allen wrench and 9/16” Open end wrench.

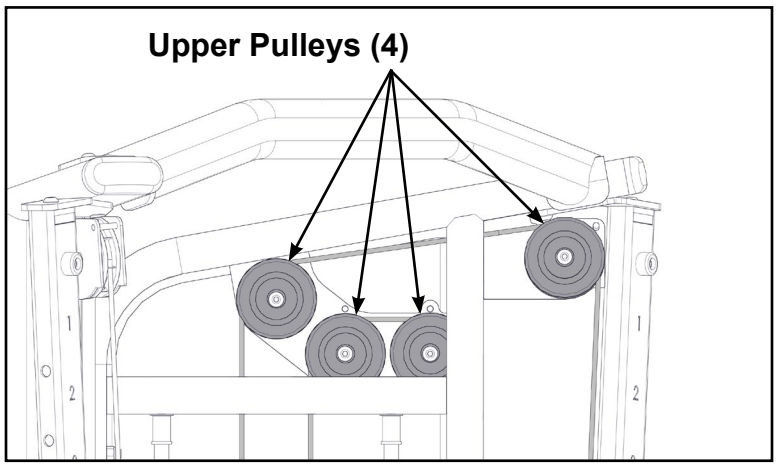

Remove lower pulleys

1. Remove the two lower pulleys using a 7/32” Allen wrench and 9/16” Open end wrench.

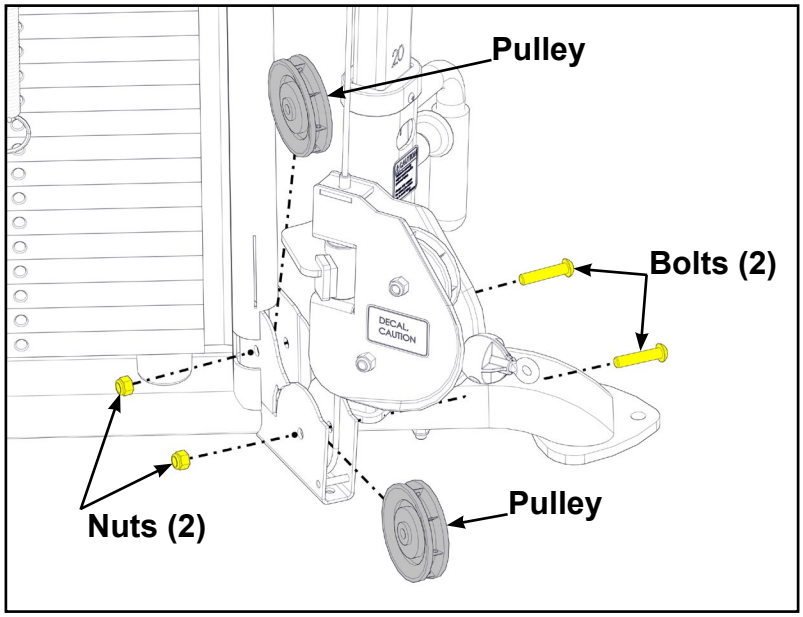

2. Remove the lower handle pulley using a 7/32” Allen wrench and 9/16” Open end wrench.

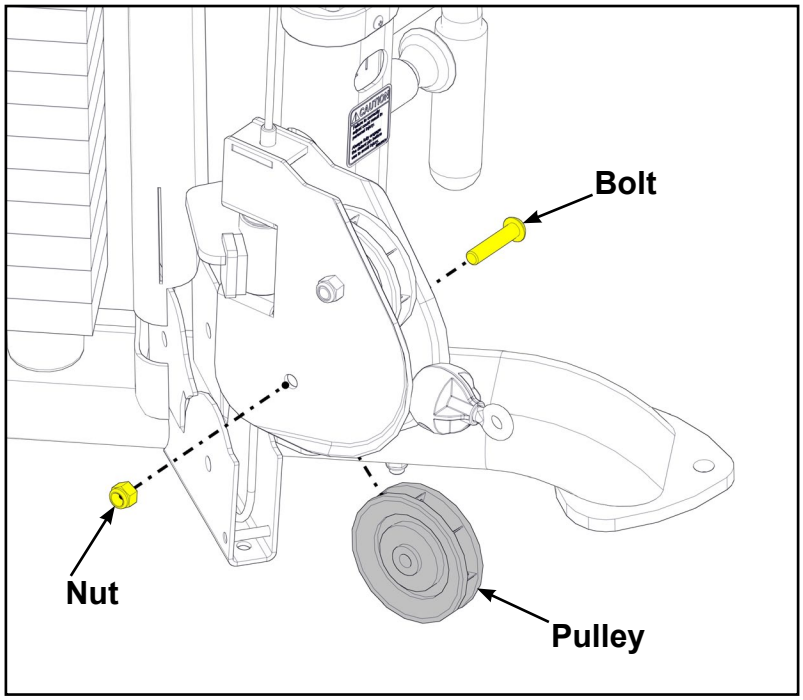

Remove old cable

1. Remove the adjusting nut and jam nut using two 9/16” Open end wrenches.

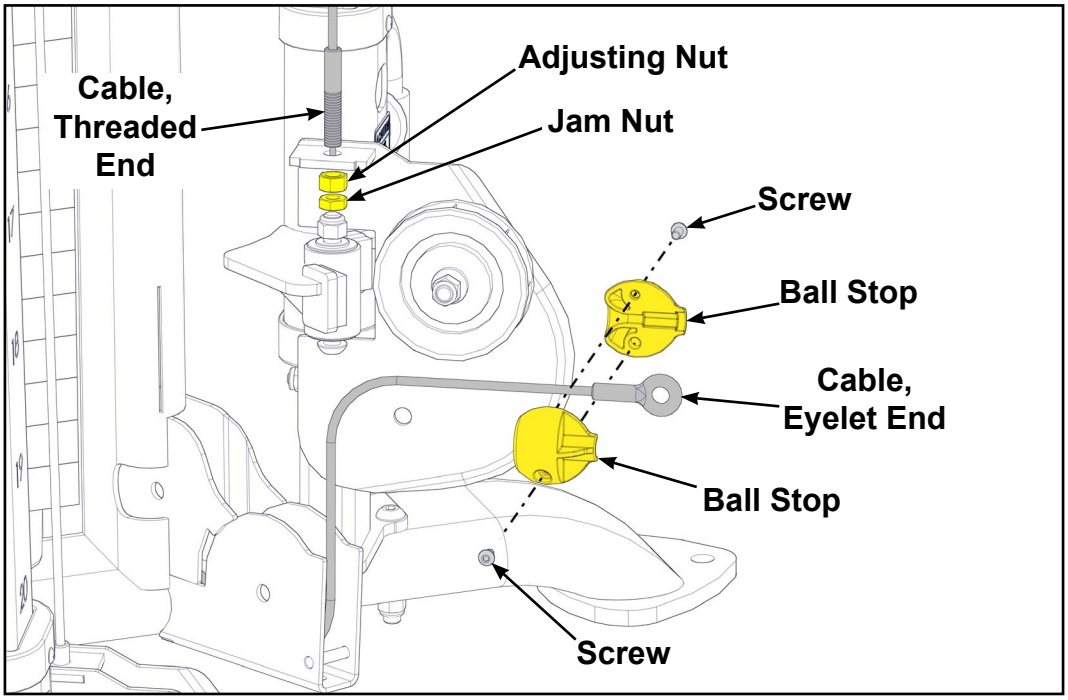

2. Remove the ball stops and screws using a 1/8” Allen wrench.
3. Remove cable.

Install new cable

1. Insert eyelet end of cable into frame until it exits the bottom.

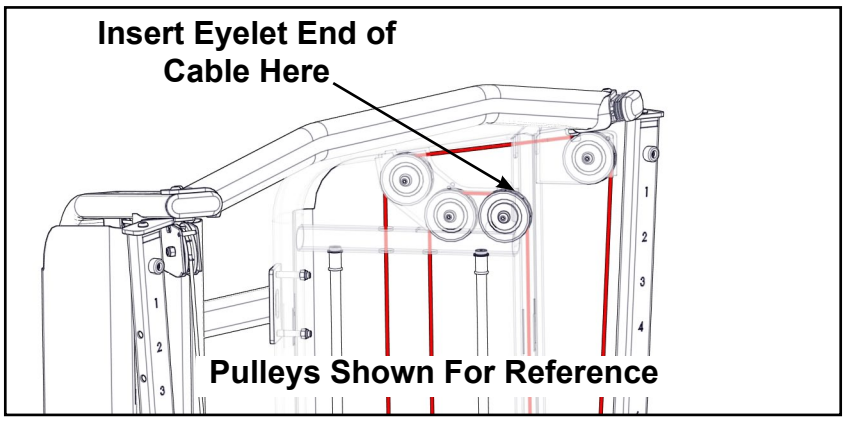

2. Install the ball stops and screws using a 1/8” Allen wrench.

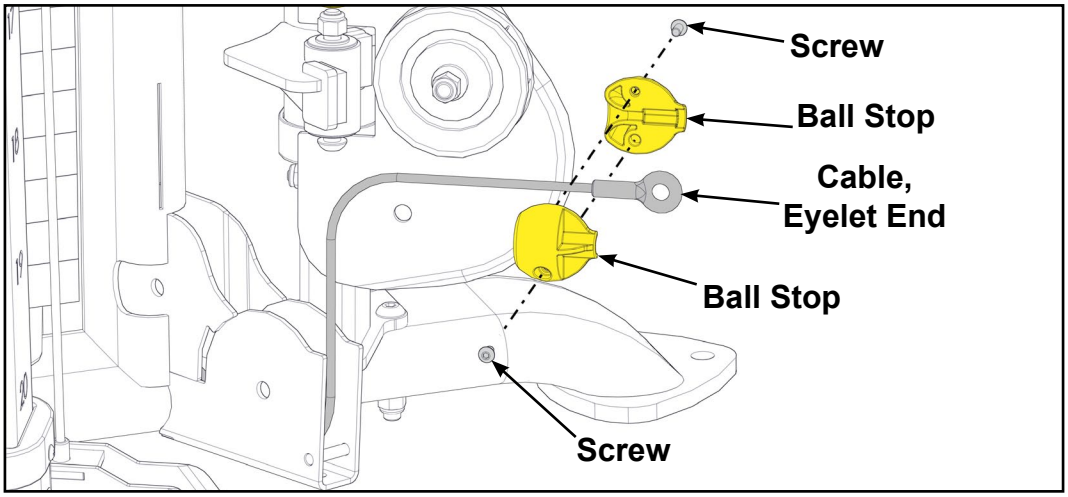

Install pulleys

1. Route cable as shown.

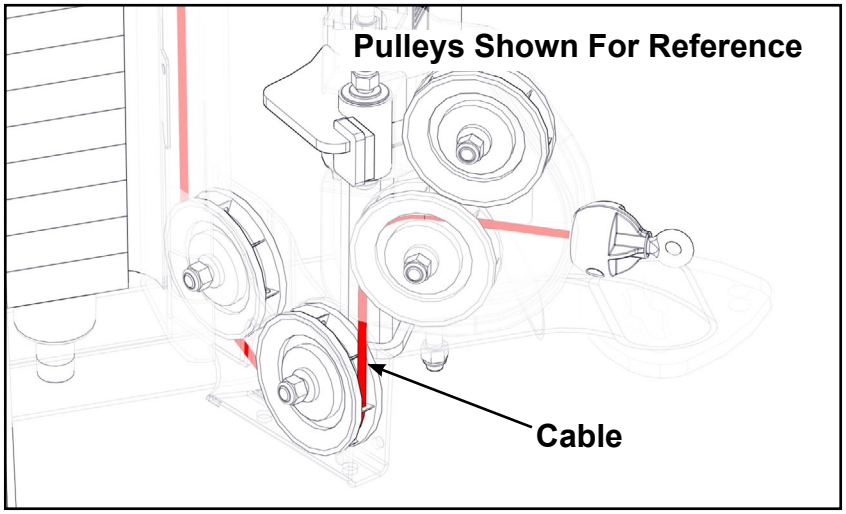

2. Install the two lower pulleys using a 7/32” Allen wrench and 9/16” Open end wrench.

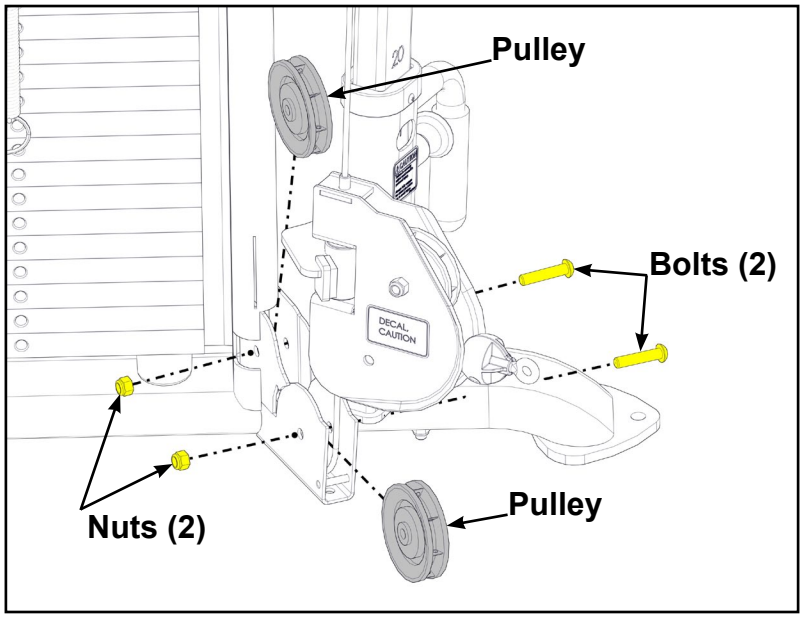

3. Install the lower handle pulley using a 7/32” Allen wrench and 9/16” Open end wrench.

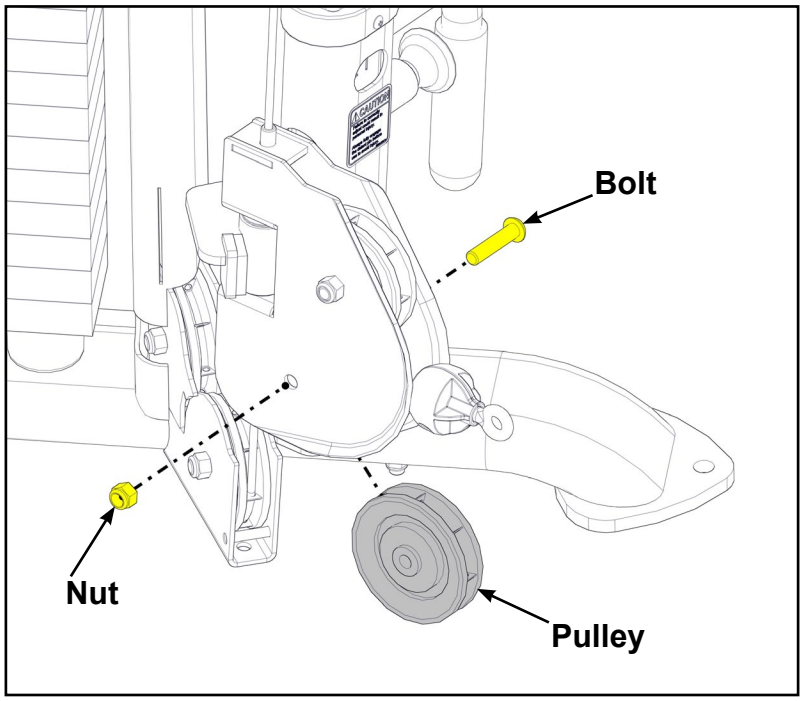

4. Route cable as shown.

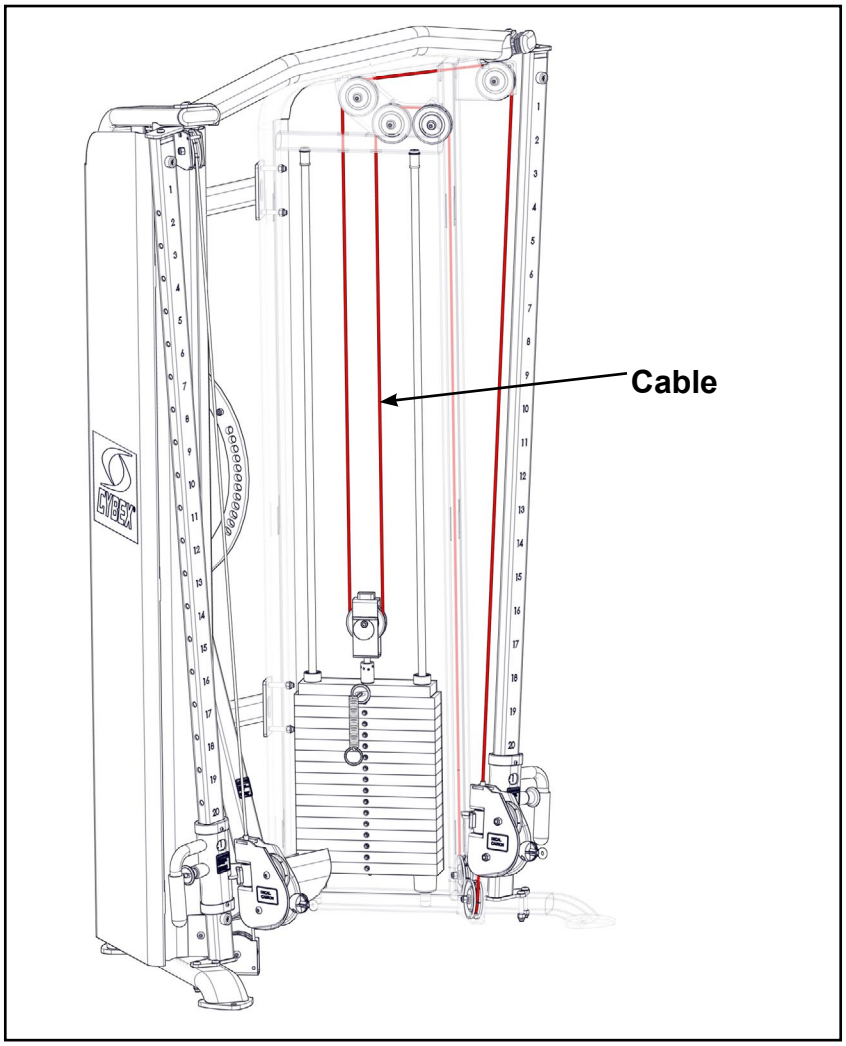

5. Install the four upper pulleys using a 7/32” Allen wrench and 9/16” Open end wrench.

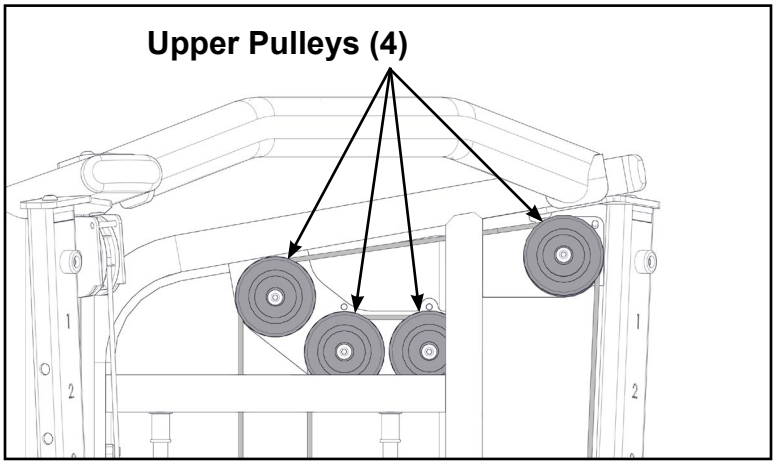

6. Install the adjusting nut and jam nut using two 9/16” Open end wrenches. Adjust slack out of cable.

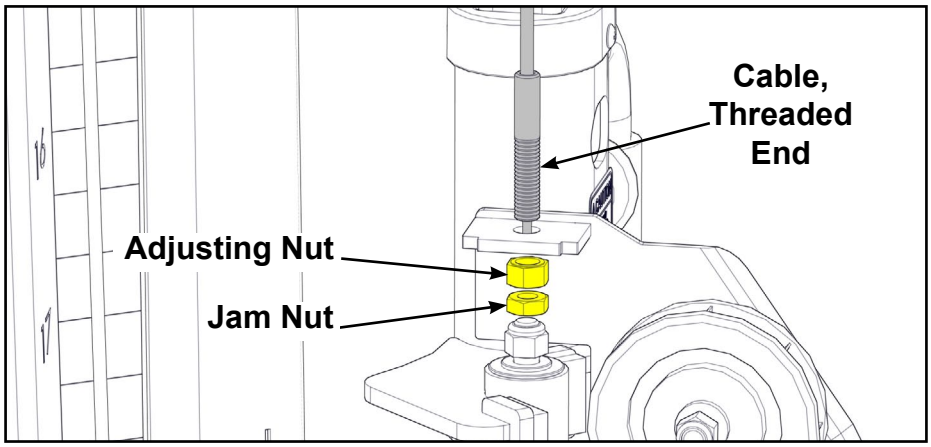

Install front panel

1. Lift front panel and insert the six tabs into the six slots in the frame.

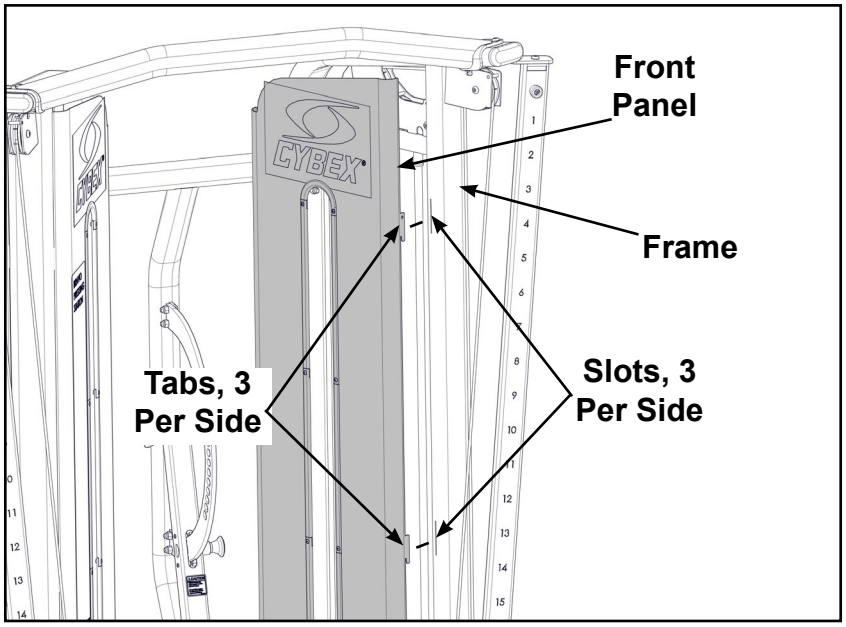

2. Slide front panel down to lock into place.

Complete installation

1. Test unit for proper operation.

Cybex® and the Cybex logo are registered trademarks of Cybex International, Inc.
10 Trotter Drive Medway, MA 02053
508-533-4300 • FAX 508-533-5183 www.cybexintl.com
Copyright © 2011, Cybex International, Inc. All rights reserved • 18010-368