REVISIONS				
REV.	DATE	DESCRIPTION	ECO	BY
A	11/11/2009	RELEASE FOR PRODUCTION	100596	SLS

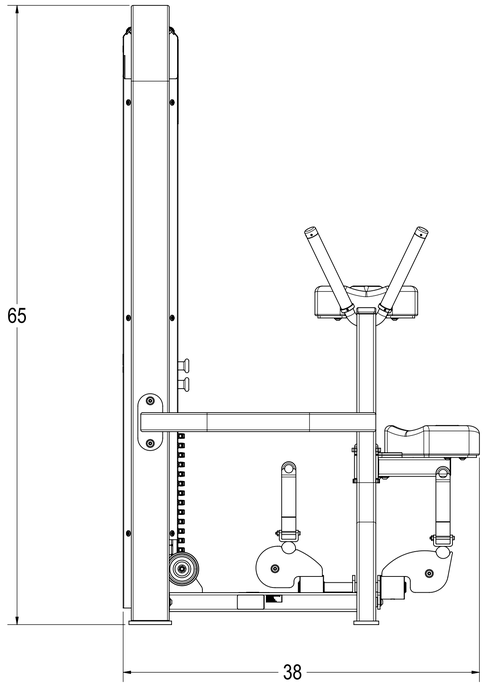

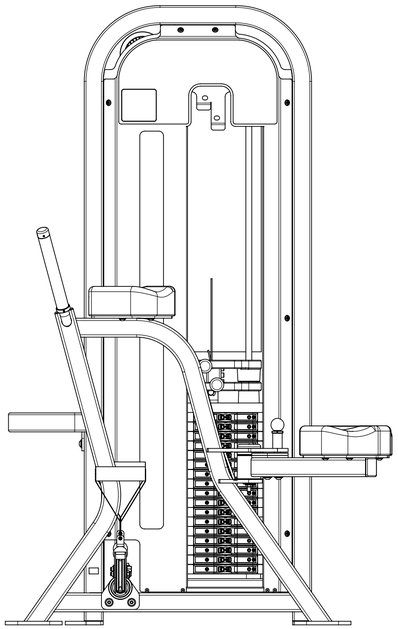

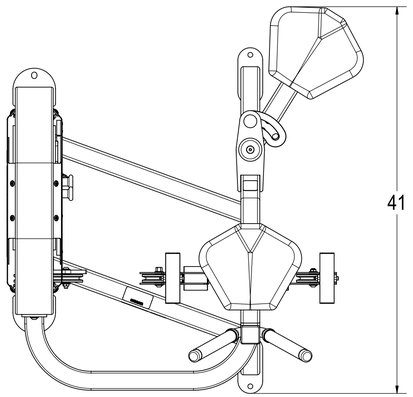

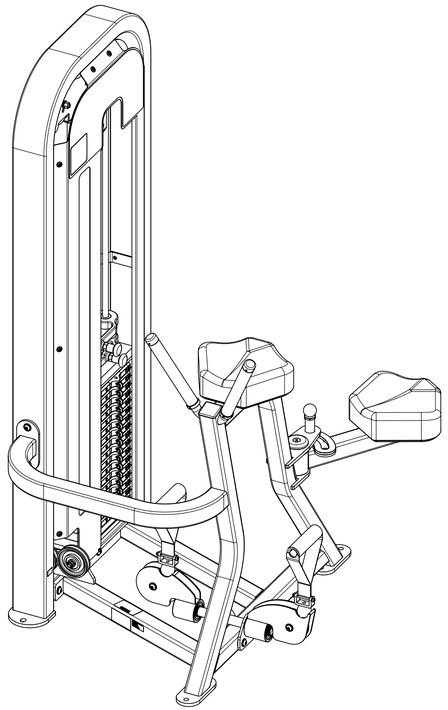

ITEM NO.	PART NUMBER	DESCRIPTION	QTY.
1	3211-0121	ASSY, WELD, MAIN FRAME, S3304	1
2	3210-0049	ASSY, WELD, PULLEY MT, LEFT	1
3	3211-0123	ASSY, WELD, PULLEY MT, LH	1
4	3211-0120	ASSY, WELD, ARM, KNEE PAD	1
5	3211-0122	ASSY, WELD, HANDLE PIVOT	1
6	4900-PNTX	POWDER COAT, TBD	1.75 LBS.
7	3311-0389	ASSY,MECH,WT FRAME,S3304E LL	1
8	3500-0125	ASSY, UPH, ARM/KNEE PAD, S3304	2
9	4900-UPHX	UPHOLSTERY, TBD	1 LIN. YD.
10	1400-0001	TUBE, GRIP, 1", BLK X 8 9/16"	17.13 IN.
11	2120-0258	BALL, BLACK, 1.5 X .391	2
12	2120-3064	TUBE, MACH, 2 X 2 X .25, .75	2
13	2120-3820	RACE, KNEE PAD ARM	1
14	2120-3824	SPACER, KNEE ARM, LG.	1
15	2120-3825	SPACER, KNEE ARM, INNER	1
16	2120-3826	CAP, BEARING 2 1/2 RND ALUM	1
17	2120-3848	RING, HANDLE, 1"	2
18	2164-0063	STOP, UNI-LAT HANDLE	2
19	3211-0125	ASSY, WELD, ROM, UNI-LAT	1
20	3311-0047	ASSY, HANDLE, UNI-LAT	2
21	4210-0032	FHSCS, 3/8-16 X 5, BRIGHT Z	1
22	4230-0057	BHSCS, 3/8 X 2 1/4, BRIGHT,Z	2
23	4230-0059	BHSCS, 3/8-16 X 4 1/4, BRIGHT, Z	3
24	4230-0060	BHSCS, 3/8-16 X 2 3/4, BRIGHT, Z	2
25	4230-0073	BHSCS, 3/8-16 X 2, BRIGHT, Z	2
26	4230-0083	BHSCS, 5/16-18 X 1 1/4, BRIGHT, Z	8
27	4230-0091	BHSCS, 3/8-16 X 1 3/4, BRIGHT, Z	2
28	4230-0092	BHSCS, 3/8-16 X 3 1/2, BRIGHT, Z	2
29	4250-0001	SSS, 10-32 X 1/8, BLK	8
30	4250-0016	SSS, 10-32 X 3/8, BLK	4
31	4300-0004	STRIP, 1/4 X 2.00	2
32	4500-0014	Nut, Nyloc, 1/4-20, NE, Z	2
33	4500-0018	NUT,3/8-16,NYLOC,NE,STL,Z	1
34	4500-0029	NUT,NYLOC,JAM,3/8-16,Z	11
35	4600-0007	WASHER, SAE, 5/16, Z	8
36	4600-0009	WASHER,SAE,3/8-16,Z	25
37	4600-0025	MACHINE BUSHING, 1", 18 GAGE	2
38	4600-0042	WASHER, 1.25 OD X .406 ID X .042, ZINC	2
39	4800-0001	BELT, MECTROL	69
40	4800-0053	CABLE,1/8 X 3/16,FCAB-135	1
41	4900-0005	CAP, HANDLE, 1",CHROME	2
42	4900-0047	PULLEY, CABLE, 3.5D X 3/8B X 1.0 W	4
43	4900-0139	BEARING, 1 ID X 2 OD, NR16-Z	6
44	4900-0140	RING,RETAIN,1" EXT,5100-100	4
45	4900-0177	PULL PIN, 1/2", K-300	1
46	4900-0547	SPRING PIN, 3/8 X 5/8	2
47	4900-0588	CAP, 2.0 x 2.0, BLACK, TEXTURED	2
48	5220-0005	LABEL, SAFETY, SECURE TO FLOOR	1
49	5220-0028	LABEL, SAFETY, PINCH POINTS	1
50	5240-0002	LABEL, INSTL, ADJ KNEE PAD	1
51	5290-0001	SERIAL NUMBER	1
52	050-2190	LABEL,PATENTS,LNL	1

NOTES:

1. INTERPRET DRAWING PER ASME Y14.5M-1994.
2. IF APPLICABLE, CRITICAL DIMENSIONS LABELED.
3. ALL HARDWARE IS KITTED PER 3700-0492.
4. ALL UPHOLSTERY IS KITTED PER 3700-0250.
5. EST. GROSS WT. 510 LBS.

DOCUMENT STATUS:
RELEASED

NOTICE OF PROPRIETARY INFORMATION
THIS DOCUMENT SHALL NOT BE REPRODUCED NOR SHALL THE INFORMATION CONTAINED HEREIN BE USED BY OR DISCLOSED TO OTHER EXCEPT AS EXPRESSLY AUTHORIZED BY UNISEN INC. D.B.A. STAR TRAC

MATERIAL
SEE BOM

FINISH
N/A

VENDOR: N/A P/N: N/A

THIRD ANGLE PROJECTION

UNLESS OTHERWISE SPECIFIED DIMENSIONS ARE IN INCHES. TOLERANCES ARE:
DECIMALS X ± .13, X.X ± .05, X.XX ± .03, X.XXX ± .010
ANGLES ±2°

	INITIAL	DATE
DRAWN	SLS	10/22/2009
CHECKED		
APPROVED		

U.O.M. INCH

UNISEN, INC. DBA STAR TRAC
14410 Myford Road
Irvine CA 92606

STARTRAC PART NO: 9LL-S3304EXXXXX REV: A

TITLE: UNI-LATERAL ROW, LL

SCALE: 1:8 SHEET 1 OF 2 SHEET SIZE: D

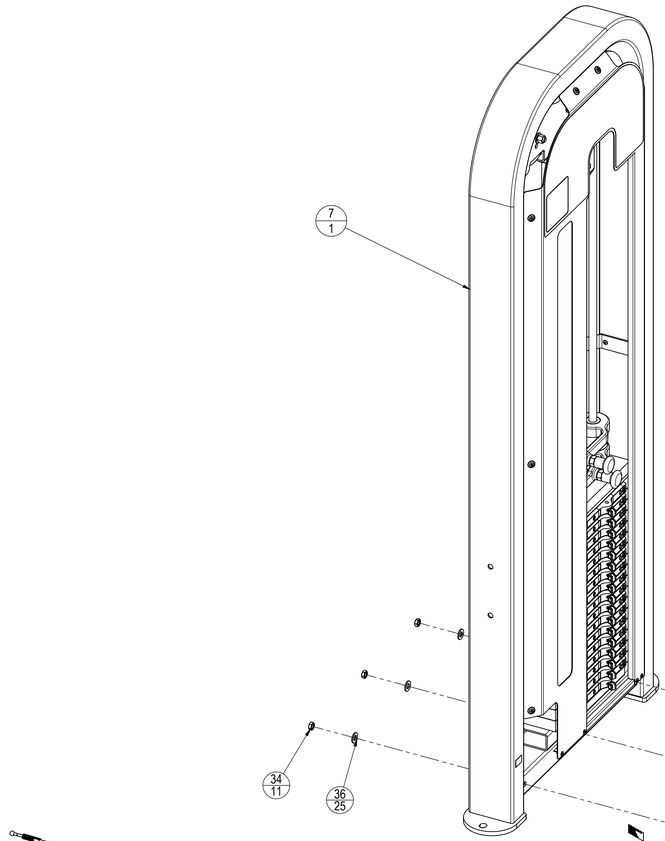

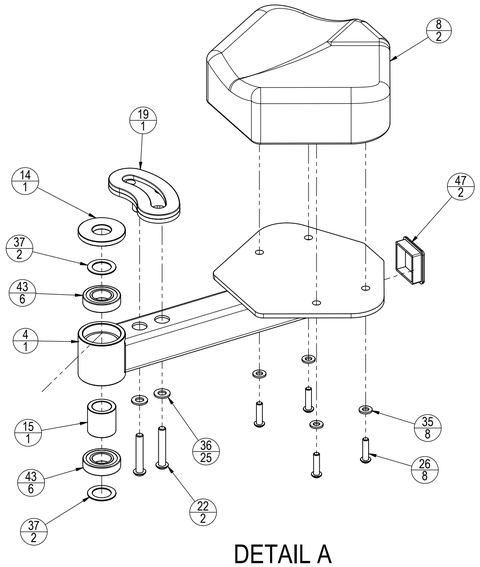

DETAIL A
SCALE 1 : 4

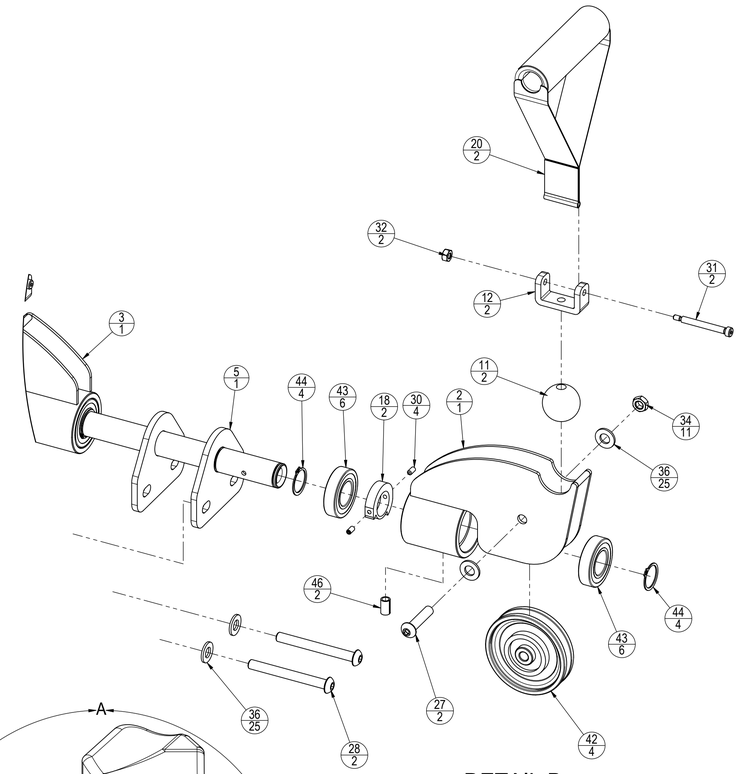

DETAIL B
SCALE 1 : 3

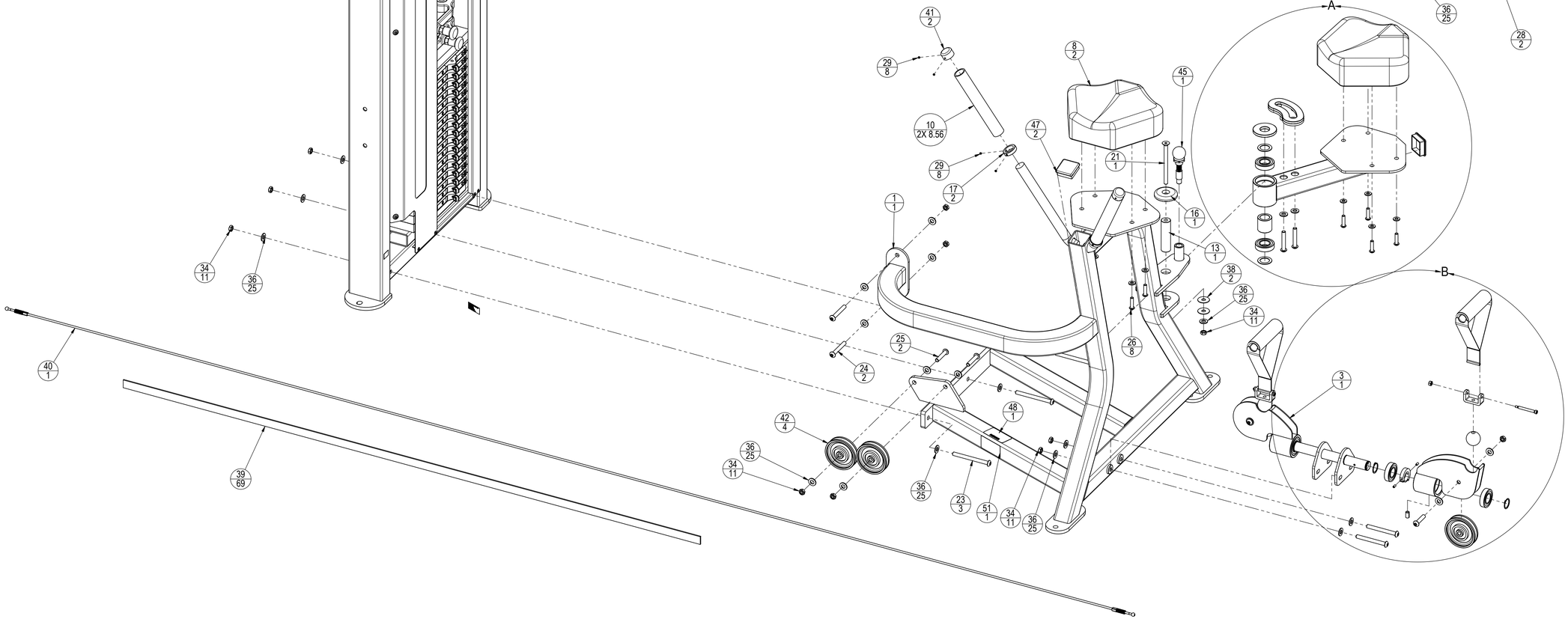

UNISEN, INC. DBA STAR TRAC	14410 Myford Road Irvine CA 92606
STARTRAC PART NO: 9LL-S3304EXXXXX	REV: A
TITLE: UNI-LATERAL ROW, LL	
SCALE: 1:6	SHEET 2 OF 2 | SHEET SIZE: D