REVISION HISTORY				
REV	DATE	DESCRIPTION	ECO	BY
A	5/1/12	RELEASED @ LAND AMERICA	---	LA
B	10/23/2012	UPDATED DRAWING	13691	PG

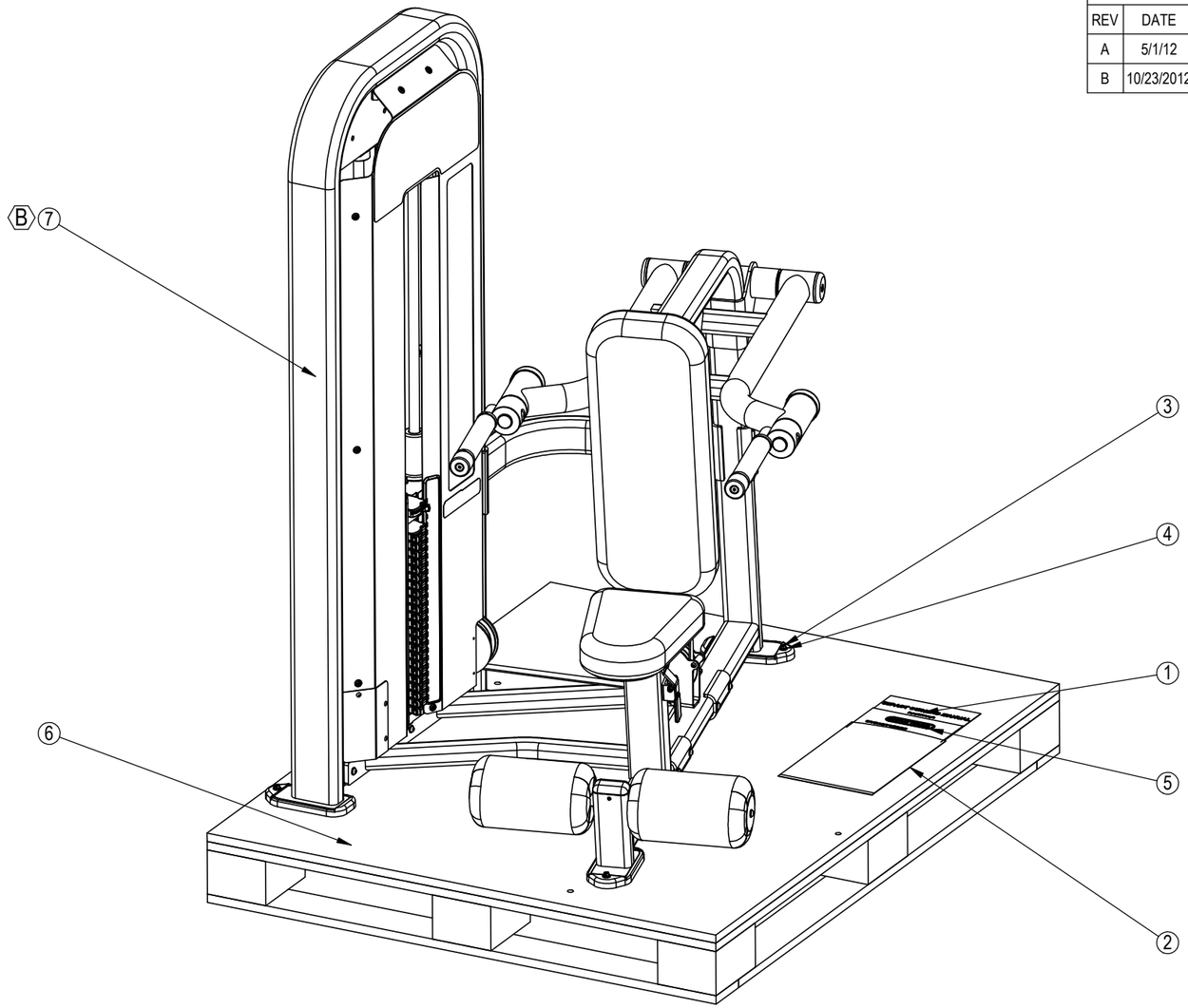

ITEM NO.	PART NUMBER	DESCRIPTION	QTY.
1	620-8143	MANUAL,OWNERS,IMPACT,STRENGTH	1
2	731-0246	BAG,225mm X 332mm	1
3	731-0256	SCREW,M6,25mm,W,HE,ZP	4
4	731-0294	WASHER,M8,NYLON	4
5	731-2449	CARD,REG,WARRANTY, IP-B	1
6	731-5763	PALLET,WOOD,ADDUCT/ABDUCT,48X60X5.5	1
B 7	LA-S5303-XXXXS	LA,SSS,DIP MACHINE	1

NOTES:

1. PLACE ITEMS 1,5, INSIDE ITEM 2.
2. ITEM 7 NOT SHOWN IN PACKED CONFIGURATION.

NOTICE OF PROPRIETARY INFORMATION

THIS DOCUMENT SHALL NOT BE REPRODUCED NOR SHALL THE INFORMATION CONTAINED HEREIN BE USED BY OR DISCLOSED TO OTHER EXCEPT AS EXPRESSLY AUTHORIZED BY CORE INDUSTRIES, INC., D.B.A. STAR TRAC.

DOCUMENT STATUS:

CLASS OF WORK		UNLESS OTHERWISE SPECIFIED DIMS ARE IN mm. TOLERANCES FOR MEASURE OF LENGTH ARE:							ANGLES = ±2°
		0.5 to 3	> 3 to 6	> 6 to 30	> 30 to 120	> 120 to 400	> 400 to 1000	> 1000 to 2000	> 2000
FINE		±0.05	±0.05	±0.1	±0.15	±0.2	±0.3	±0.5	-----
MEDIUM	X	±0.1	±0.1	±0.2	±0.3	±0.5	±0.8	±1.2	±2
COARSE		±0.2	±0.3	±0.5	±0.8	±1.2	±2	±3	±4
VERY COARSE		-----	±0.5	±1	±1.5	±2.5	±4	±6	±8

MATERIAL
SEE BOM

FINISH
N/A

VENDOR: **N/A** P/N: **N/A**

THIRD ANGLE PROJECTION

	INITIAL	DATE
DRAWN	PG	10/23/12
CHECKED		
APPROVED		
	U.O.M.	MM

CORE INDUSTRIES, INC. DBA
STAR TRAC
14410 Myford Road
Irvine CA 92606

STARTRAC PART NO: **9LA-S5303-XXXXS**
REV: **B**
TITLE: LA,SSS,DIP MACHINE
SCALE: 1:15 | SHEET 1 OF 1 | SHEET SIZE: B