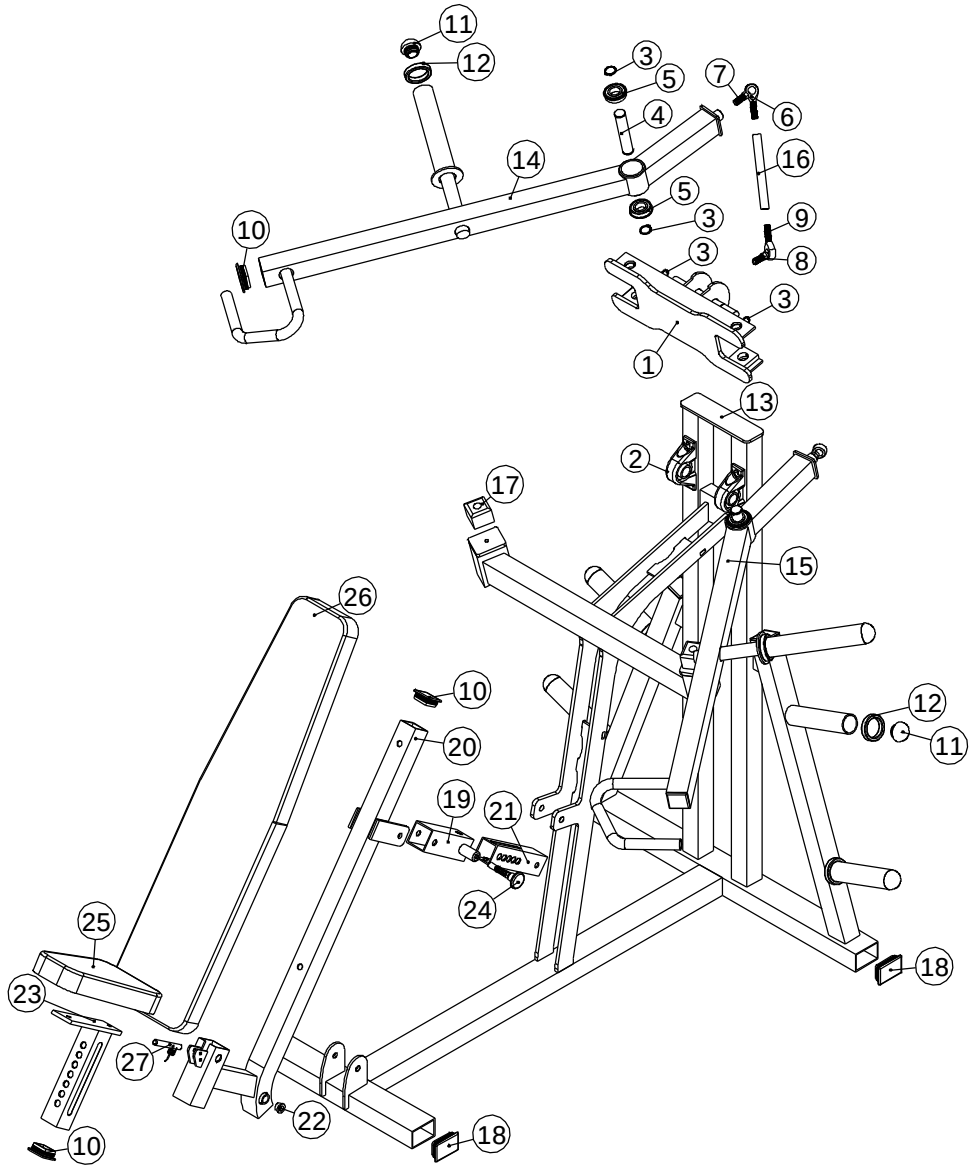

This document contains information proprietory to Magnum Fitness Systems. It is submitted in confidence and is to be used solely for the purpose for whitch it is furnished. This document and such information is not to be reproduced, trnsmitted, or used in whole or part without written authorization.

TOLERANCES: + 0.000"
- 1/16"

UNLESS OTHERWISE SPECIFIED DIMENSIONS ARE IN INCHES.

MAGNUM FITNESS SYSTEMS
2201 12th. Avenue
S. Milwaukee, Wi, 53172

TITLE: 417 - Incline Press

DRAWN BY.	DATE:	PART NO.	JOB NO.	REV:
Josh Ellis	09/17/07	xxx-xxx	XXXXXXXX	1

FILE LOCATION: C:\Cad Drawings\Solid Works\

ITEM NO.	QTY.	PART NO.	DESCRIPTION
1	1	100-856	H-Brace
2	2	851-317	1" PILLOW BLOCK
3	6	819-316	1" Ext. SNAP RING
4	2	200-388	1" CRR - 5"
5	4	851-416	FLANGE BEARING - 1"
6	2	855-154f	Ball Joint (Female Half)
7	2	855-154m	Ball Joint (Male half)
8	2	855-156m	Ball Joint (Male Half)
9	2	855-156f	Ball Joint (Female Half)(Threaded Left Handed)
10	6	850-004	2" x 2" END CAP
11	6	850-030	Bullet End Cap
12	6	858-253	2 1/2"OD x 1 7/8"ID RUBBER BUMPER - 1/2"
13	1	100-862	Main Frame
14	1	100-840	Right Arm
15	1	100-841	Left Arm
16	2	250-399	3/4"OD x 7/16"ID PIPE - 7"
17	2	858-260	2" x 2" RUBBER BUMMPER
18	4	850-006	2" X 3" END CAP
19	1	100-738	Slide
20	1	100-737	Seat Frame
21	1	339-809	Chrome Slide
22	2	851-514	1/2" BRASS BUSHING
23	1	339-708	SEAT POST - CHROMED
24	1	101-140	SPRING PIN ASSEMBLY
25	1	900-187	Seat Pad
26	1	900-188	Back Pad
27	1	101-411	Lever Lock Assembly

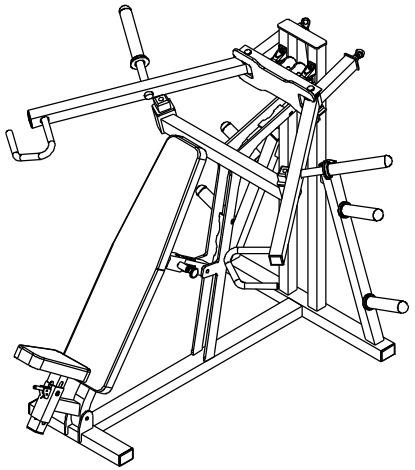

This document contains information proprietory to Magnum Fitness Systems. It is submitted in confidence and is to be used solely for the purpose for whitch it is furnished. This document and such information is not to be reproduced, trnsmitted, or used in whole or part without written authorization.

TOLERANCES: + 0.000" - 1/16"

UNLESS OTHERWISE SPECIFIED DIMENSIONS ARE IN INCHES.

MAGNUM FITNESS SYSTEMS
2201 12th. Avenue
S. Milwaukee, Wi, 53172

TITLE: 417 - Incline Press

DRAWN BY.	DATE:	PART NO.	JOB NO.	REV:
Josh Ellis	09/17/07	xxx-xxx	XXXXXXXX	1

FILE LOCATION: C:\Cad Drawings\Solid Works\