# PRO 2 SERIES
# PSFLYSE
# PECTORAL FLY / REAR DELTOID

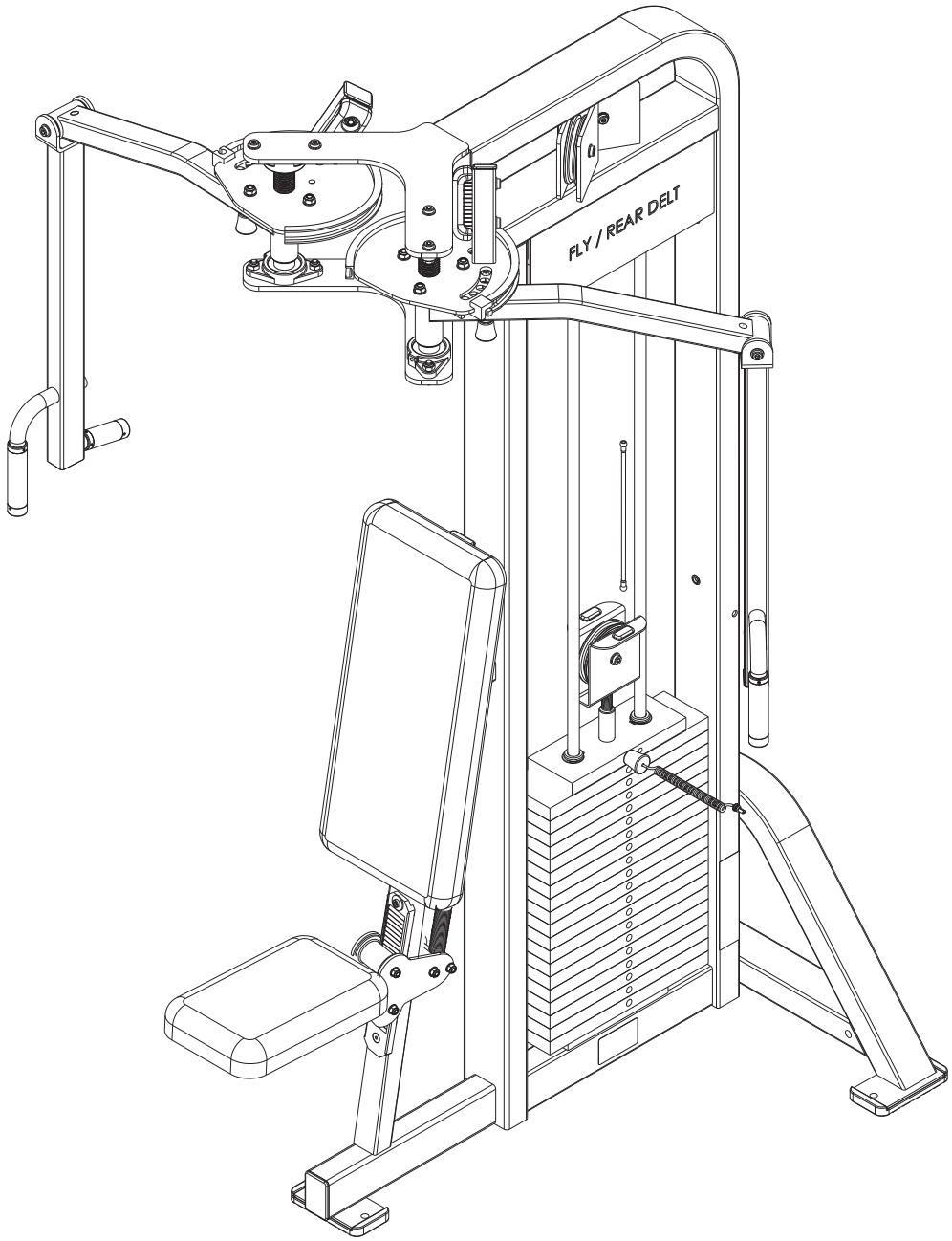


Customer Support Services

PARTS MANUAL

# PSFLYSE PECTORAL FLY/REAR DELTOID
## Contents


| | PAGE |
|---|---|
| COMPONANT ASSEMBLY | 3 |
| 97 ROLLER SEAT ASSEMBLY | 4 |
| RIGHT WORKARM ASSEMBLY | 5 |
| LEFT WORKARM ASSEMBLY | 6 |
| STACK FRAME ASSEMBLY | 7 |
| 300LB WEIGHT STACK ASSEMBLY | 8 |
| INCREMENT WEIGHT ASSEMBLY | 9 |
| INCREMENT WEIGHT W/STRIKER | 10 |
| REAR SHROUD KIT | 11 |
| OPTIONAL FULL SHROUD KIT | 12 |

# PSFLYSE PECTORAL FLY/REAR DELTOID COMPONENT ASSEMBLY

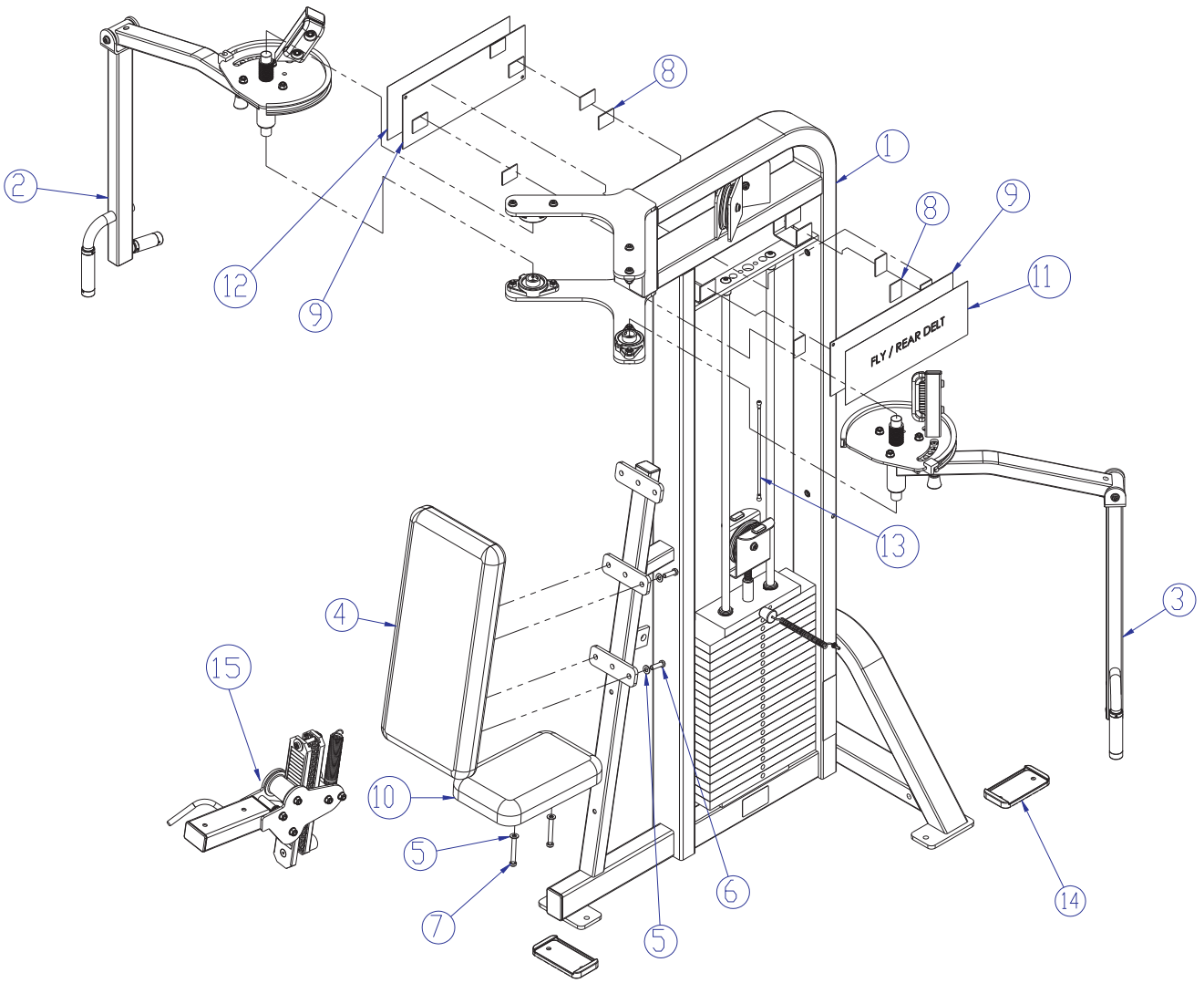


| ITEM NO | QTY | PART NO | DESCRIPTION |
|---|---|---|---|
| 1 | 1 | 7425801 | ASSY, PSFLY STACK FRAME |
| 2 | 1 | [redacted] | ASSY, PSFLY WORKARM RHT |
| 3 | 1 | [redacted] | ASSY, PSFLY WORKARM LFT |
| 4 | 1 | 7398801 | PAD, BACK 25 X 11-1/4 |
| 5 | 6 | 3236601 | WASHER, 3/8 SAE SS |
| 6 | 4 | 3236204 | SCREW, M10 X1.5 35MM |
| 7 | 2 | 3236212 | SCREW, M10 X1.5 75MM |
| 8 | 12 | 7544202 | PAD, DUAL LOCK 250 1.5" X 2.0" |
| 9 | 2 | 7415402 | COVER, STACK-PRO2 RECT. |
| 10 | 1 | 7398901 | PAD, SEAT 13-1/4 X 8-1/4 |
| 11 | 1 | 7446201 | LABEL, PSFLY PLACARD |
| 12 | 1 | 7490901 | LABEL, PSFLY LOGO PANEL |
| 13 | 1 | 7423802 | CABLE, PSFLY |
| 14 | 3 | 7388201 | Footpad, PS Rubber |
| 15 | 1 | [redacted] | 97 DEG, ROLLER SEAT ASSY. |

# PSFLYSE PECTORAL FLY/REAR DELTOID
# 97 DEGREE ROLLER SEAT ASSEMBLY - 7396701

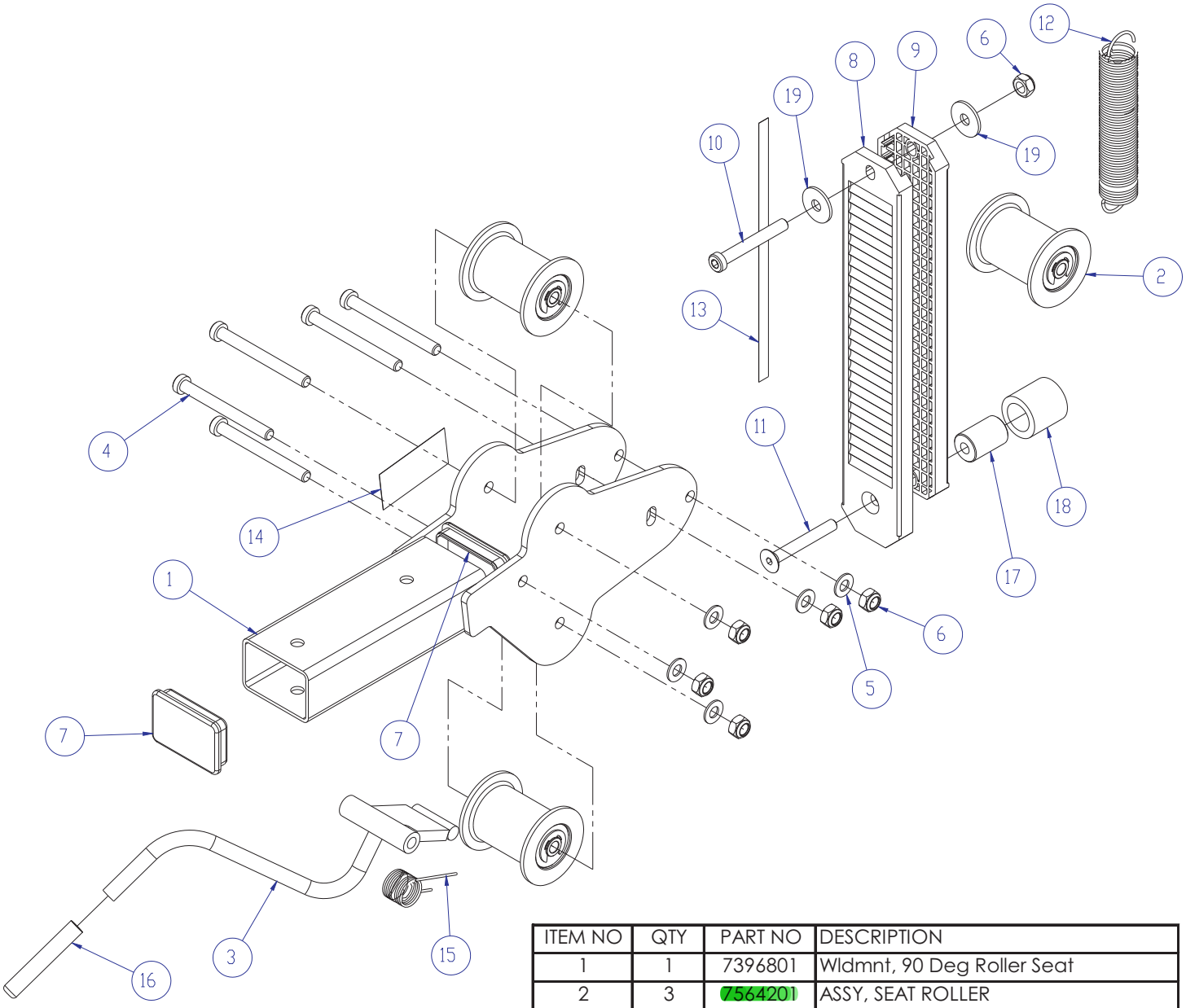


| ITEM NO | QTY | PART NO | DESCRIPTION |
|---|---|---|---|
| 1 | 1 | 7396801 | Wldmnt, 90 Deg Roller Seat |
| 2 | 3 | 7564201 | ASSY, SEAT ROLLER |
| 3 | 1 | 7387595 | WELDMNT, PS-ROLLER SEAT HANDLE |
| 4 | 5 | 3236217 | SCREW, M10 X1.5 100MM |
| 5 | 5 | 3236601 | WASHER, 3/8 SAE SS |
| 6 | 6 | 3236801 | NUT, M10 HEX NYLOCK SS |
| 7 | 2 | 7352301 | CAP, END 2 X 3 |
| 8 | 1 | 7564301 | SEATRACK, ROLLER SERRATED |
| 9 | 1 | 7564401 | SEATRACK, FLAT |
| 10 | 1 | 3236212 | SCREW, M10 X1.5 75MM |
| 11 | 1 | 3238312 | M10x1.5x75mm |
| 12 | 1 | 7442601 | SPRING, PRO2 ROLLER SEAT |
| 13 | 1 | 7422002 | LABEL, SEAT ADJUST |
| 14 | 1 | 7422001 | LABEL, SEAT INST |
| 15 | 1 | 7442701 | SPRNG, PRO2 HANDLE TORSION |
| 16 | 1 | 3238502 | CAP, 1/2 X 3 |
| 17 | 1 | 7570601 | STOP, ROLLER SEAT |
| 18 | 1 | 3235802 | GRIP, SHADOW GRAY, 1.5" |
| 19 | 2 | 3236602 | WASHER, 3/8 ID X 1.25 OD SS |

# PSFLYSE PECTORAL FLY/REAR DELTOID
# RIGHT WORKARM ASSEMBLY

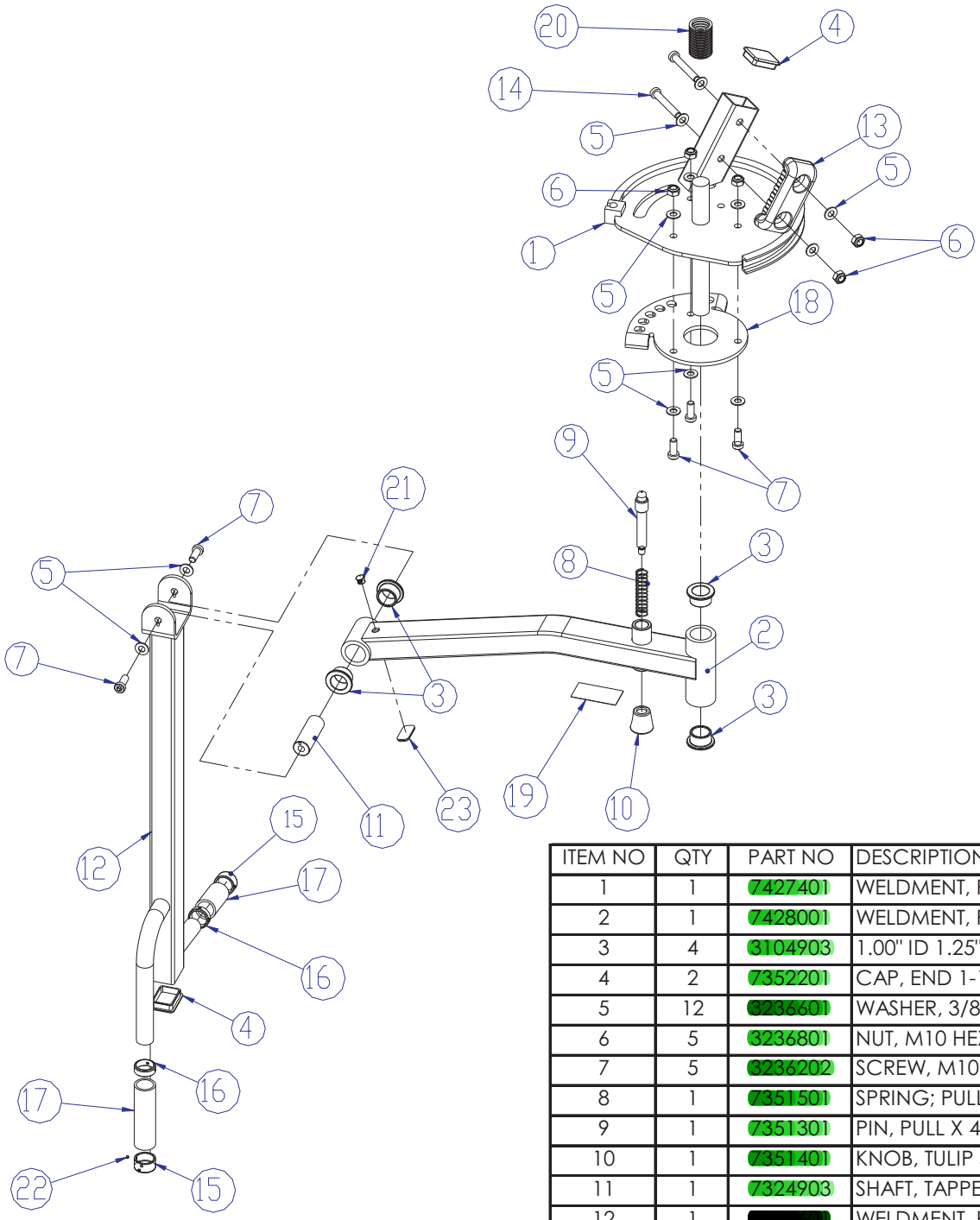


| ITEM NO | QTY | PART NO | DESCRIPTION |
|---|---|---|---|
| 1 | 1 | 7427401 | WELDMENT, PSFLY CAM R |
| 2 | 1 | 7428001 | WELDMENT, PS TOP WORKARM |
| 3 | 4 | 3104903 | 1.00" ID 1.25" OD BRONZ BUSHING |
| 4 | 2 | 7352201 | CAP, END 1-1/2 X 2 |
| 5 | 12 | 3236601 | WASHER, 3/8 SAE SS |
| 6 | 5 | 3236801 | NUT, M10 HEX NYLOCK SS |
| 7 | 5 | 3236202 | SCREW, M10 X1.5 25MM |
| 8 | 1 | 7351501 | SPRING; PULL PIN LARGE |
| 9 | 1 | 7351301 | PIN, PULL X 4.375 |
| 10 | 1 | 7351401 | KNOB, TULIP STYLE |
| 11 | 1 | 7324903 | SHAFT, TAPPED 1 DIA X 2.813 |
| 12 | 1 | [illegible] | WELDMENT, PSFLY SWINGARM |
| 13 | 1 | 7352001 | BUMPER, 2-1/8 X 4-5/8 |
| 14 | 2 | 3236210 | SCREW, M10 X1.5 65MM |
| 15 | 2 | 7662901 | CAP, GRIP 1.25 OD |
| 16 | 2 | 7662801 | RING, GRIP 1.25 OD |
| 17 | 2 | 3235801 | GRIP, 1.25 OD OPEN END |
| 18 | 1 | 7428301 | FLANGE, PSFLY RANGE RIGHT |
| 19 | 1 | 7422003 | LABEL, MOVING PARTS |
| 20 | 1 | 6912804 | SLEEVE, ACCRDN 1.0 ID X 2 |
| 21 | 1 | 3237401 | PLUG, 7/16" HOLE |
| 22 | 8 | 3247701 | M4 X .7 HXS NO CUP ST BO |
| 23 | 1 | 7570801 | Guard, Paint 1.25"x.75"x.25" |

# PSFLYSE PECTORAL FLY/REAR DELTOID
# LEFT WORKARM ASSEMBLY

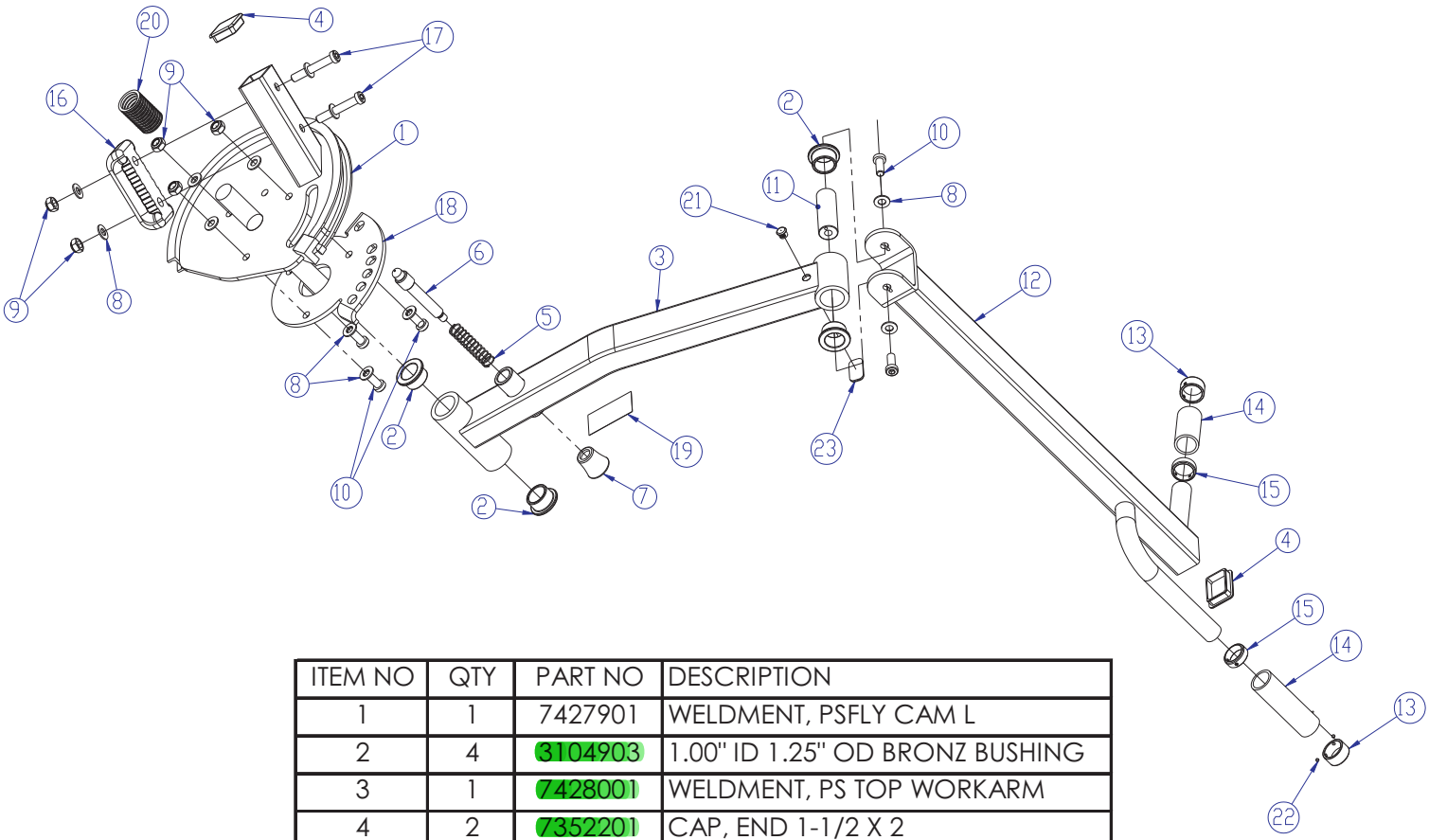


| ITEM NO | QTY | PART NO | DESCRIPTION |
|---|---|---|---|
| 1 | 1 | 7427901 | WELDMENT, PSFLY CAM L |
| 2 | 4 | 3104903 | 1.00" ID 1.25" OD BRONZ BUSHING |
| 3 | 1 | 7428001 | WELDMENT, PS TOP WORKARM |
| 4 | 2 | 7352201 | CAP, END 1-1/2 X 2 |
| 5 | 1 | 7351501 | SPRING; PULL PIN LARGE |
| 6 | 1 | 7351301 | PIN, PULL X 4.375 |
| 7 | 1 | 7351401 | KNOB, TULIP STYLE |
| 8 | 12 | 3236601 | WASHER, 3/8 SAE SS |
| 9 | 5 | 3236801 | NUT, M10 HEX  NYLOCK SS |
| 10 | 5 | 3236202 | SCREW, M10 X1.5 25MM |
| 11 | 1 | 7324903 | SHAFT, TAPPED 1 DIA X 2.813 |
| 12 | 1 | 7874701 | WELDMENT, PSFLY SWINGARM |
| 13 | 2 | 7662901 | CAP, GRIP 1.25 OD |
| 14 | 2 | 3235801 | GRIP, 1.25 OD OPEN END |
| 15 | 2 | 7662801 | RING, GRIP 1.25 OD |
| 16 | 1 | 7352001 | BUMPER, 2-1/8 X 4-5/8 |
| 17 | 2 | 3236210 | SCREW, M10 X1.5 65MM |
| 18 | 1 | 7429101 | FLANGE, PSFLY RANGE LEFT |
| 19 | 1 | 7422003 | LABEL, MOVING PARTS |
| 20 | 1 | 6912804 | SLEEVE, ACCRDN 1.0 ID X 2 |
| 21 | 1 | 3237401 | PLUG, 7/16" HOLE |
| 22 | 8 | 3247701 | M4 X .7 HXS NO CUP ST BO |
| 23 | 1 | 7570801 | Guard, Paint 1.25"x.75"x.25" |

# PSFLYSE PECTORAL FLY/REAR DELTOID STACK FRAME ASSEMBLY - 7425801

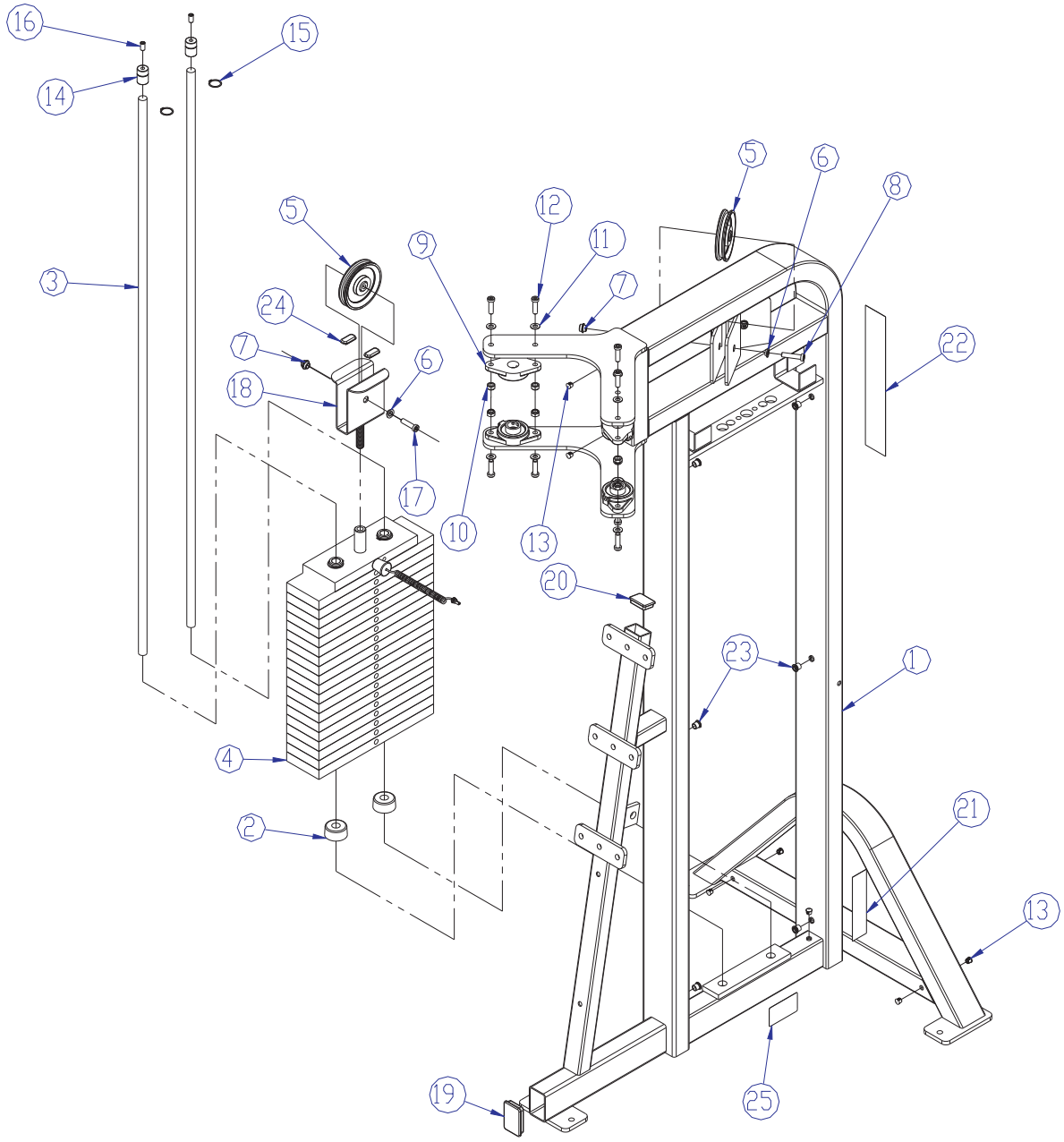


| ITEM NO | QTY | PART NO | DESCRIPTION |
|---|---|---|---|
| 1 | 1 | 7425901 | WELDMT, PSFLY MAIN |
| 2 | 2 | 7352101 | CUSHION, WEIGHT STACK |
| 3 | 2 | 7328606 | GUIDE ROD, .75 OD SOLID 59.63 |
| 4 | 1 | 7353501 | ASSY, 300LB STACK |
| 5 | 3 | 3237801 | PULLEY, 4.5" OD |
| 6 | 3 | 7348101 | WASHER, SPACER |
| 7 | 3 | 7335401 | NUT, M10 X 1.5 SOCKET HEAD |
| 8 | 2 | 3236206 | SCREW, M10 X1.5 45MM |
| 9 | 4 | 3237701 | ASSY, PILLOW BLOCK 4.88 X 2.75 |
| 10 | 8 | 3236801 | NUT, M10 HEX NYLOCK SS |
| 11 | 8 | 3236601 | WASHER, 3/8 SAE SS |
| 12 | 8 | 3236204 | SCREW, M10 X1.5 35MM |

| | | | |
|---|---|---|---|
| 13 | 8 | 3237401 | PLUG, 7/16" HOLE |
| 14 | 2 | 7402301 | RETAINER, GUIDEROD |
| 15 | 2 | 3232421 | RING, BRE .940, 5100-100 ST PP B |
| 16 | 2 | 3240501 | M10 X 1.5 HXS NO CUP ST BO |
| 17 | 1 | 3236205 | SCREW, M10 X1.5 40MM |
| 18 | 1 | 7425795 | WELDMENT, FLOATING PULLEY |
| 19 | 1 | 7352301 | CAP, END 2 X 3 |
| 20 | 1 | 7352201 | CAP, END 1-1/2 X 2 |
| 21 | 1 | 7422004 | LABEL, 2" ASTM WARN |
| 22 | 1 | 7348001 | LABEL, LIFE FITNESS LOGO |
| 23 | 6 | 3238101 | NUT, BLIND INSERT M10 X 1.5 |
| 24 | 2 | 7570801 | Guard, Paint 1.25"x.75"x.25" |
| 25 | 1 | 7571301 | LABEL, SERIAL NUMBER |

# PSFLYSE PECTORAL FLY/REAR DELTOID
# WEIGHT STACK ASSY 300LB - 7353501

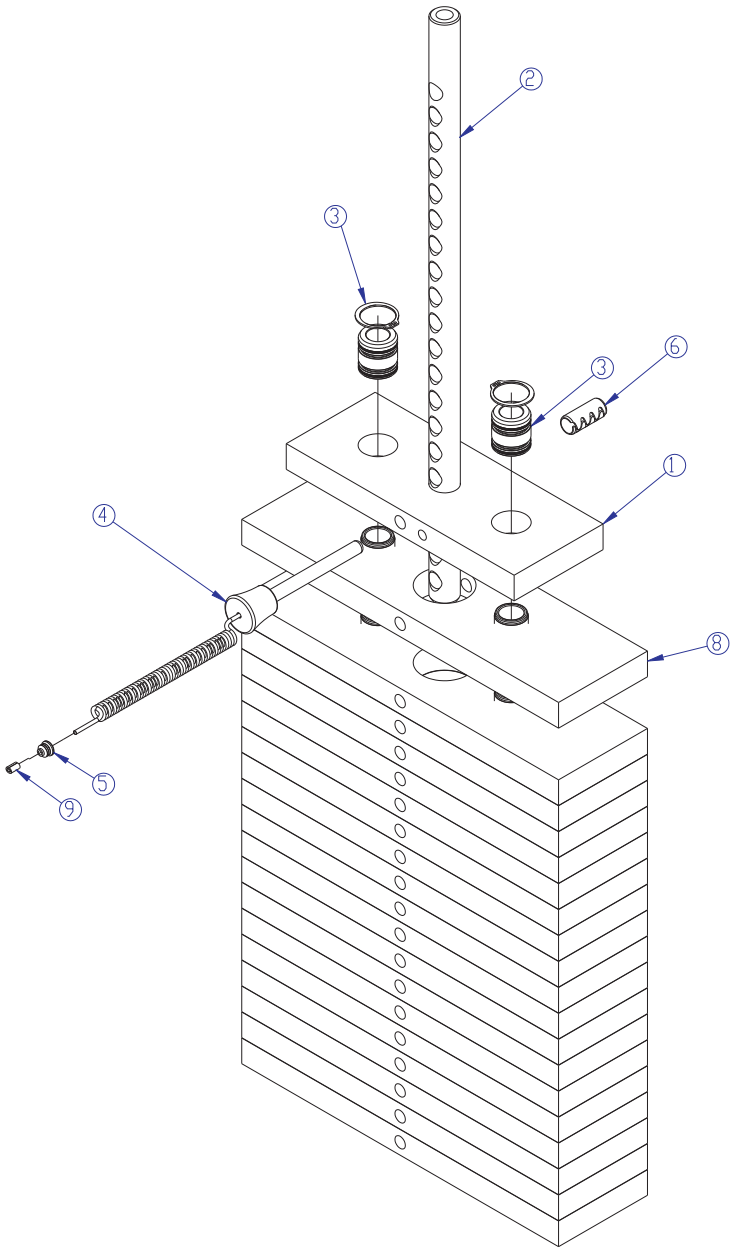


| ITEM NO | QTY | PART NO | DESCRIPTION |
|---|---|---|---|
| 1 | 1 | 7353901 | HEADPLATE, WT. STACK |
| 2 | 1 | 7356600 | STEM, PRO2 19 HOLE |
| 3 | 2 / 2 | 7338001 | HEADPLATE BUSHING & CLIP |
| 4 | 1 | 7353001 | ASSY, SELECTOR PIN |
| 5 | 1 | 7356501 | PLUG, LANYARD ATTACHMENT |
| 6 | 1 | 3236001 | BUSHING, SPRING PIN |
| 8 | 19 | 7353801 | ASSY, 15 LB PLATE |
| 9 | 1 | 7523601 | CRIMP, CABLE |

# PSFLYSE PECTORAL FLY/REAR DELTOID
# 5LB INCREMENT WEIGHT ASSEMBLY - 7446501

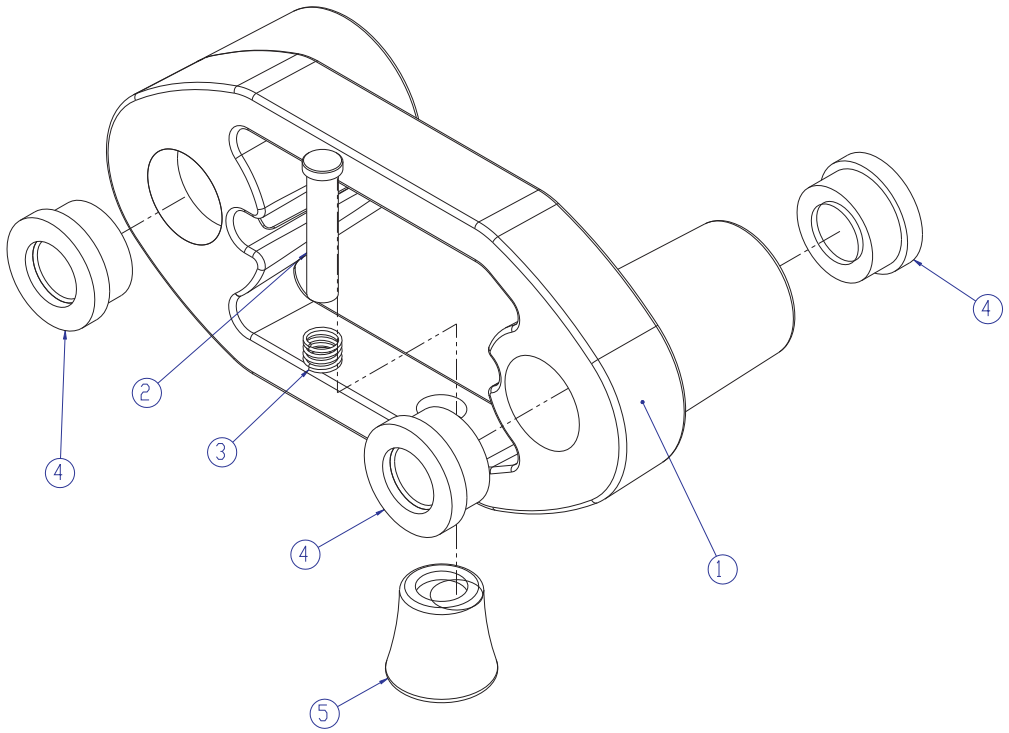


| ITEM NO | QTY | PART NO | DESCRIPTION |
|---|---|---|---|
| 1 | 1 | 7446602 | BODY, 5LB INCREMENT WEIGHT |
| 2 | 1 | 7446901 | PIN, RETAINING |
| 3 | 1 | 7447001 | SPRING, COMPRESSION |
| 4 | 3 | 7560001 | BUSHING, MTS, INC WEIGHT |
| 5 | 1 | 7351401 | KNOB, TULIP STYLE |

# PSFLYSE PECTORAL FLY/REAR DELTOID INCREMENT WEIGHT W/STRIKER - 7415101

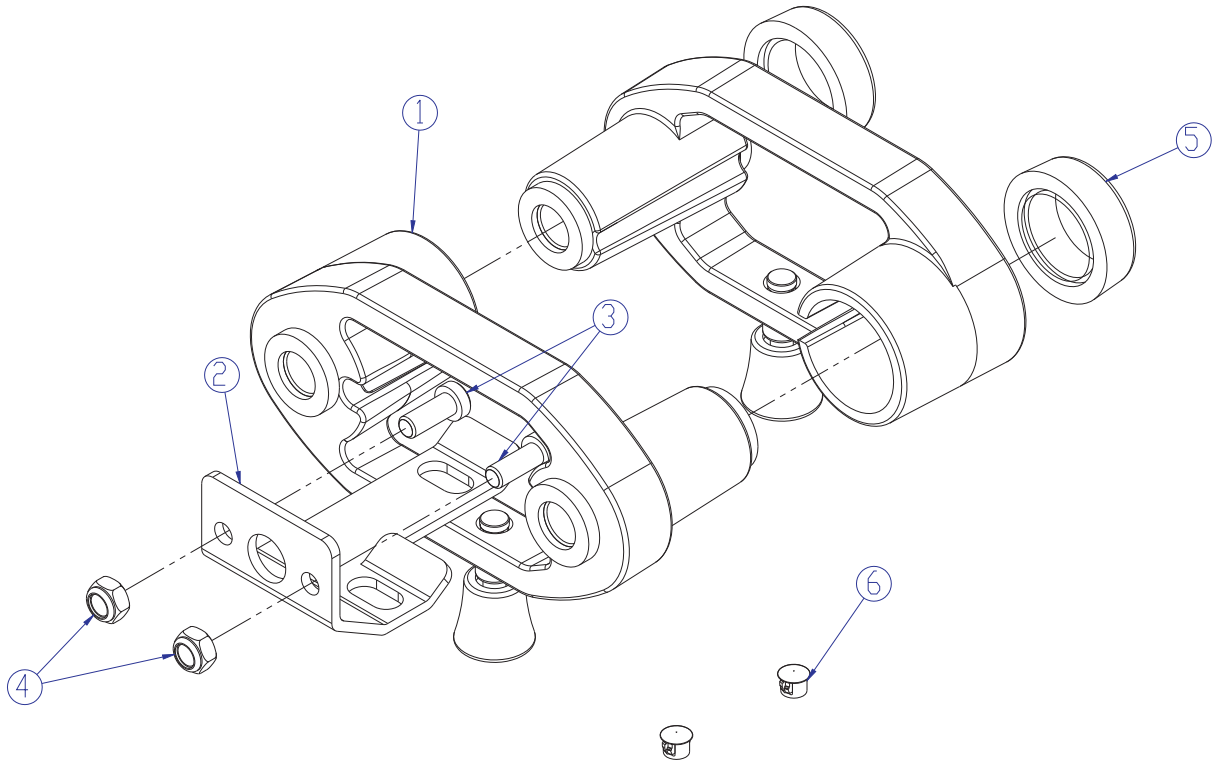


| ITEM NO | QTY | PART NO | DESCRIPTION |
|---|---|---|---|
| 1 | 2 | 7446501 | ASSY, 5LB INCREMENT WEIGHT |
| 2 | 1 | 7447101 | PLATE, INCR. WT STRIKER |
| 3 | 2 | 3236202 | SCREW, M10 X1.5 25MM |
| 4 | 2 | 3236801 | NUT, M10 HEX  NYLOCK SS |
| 5 | 2 | 7767601 | BUMPER, PS INCREMENT WT |
| 6 | 2 | 3237401 | PLUG, 7/16" HOLE |

# PSFLYSE PECTORAL FLY/REAR DELTOID REAR SHROUD KIT - 7601001

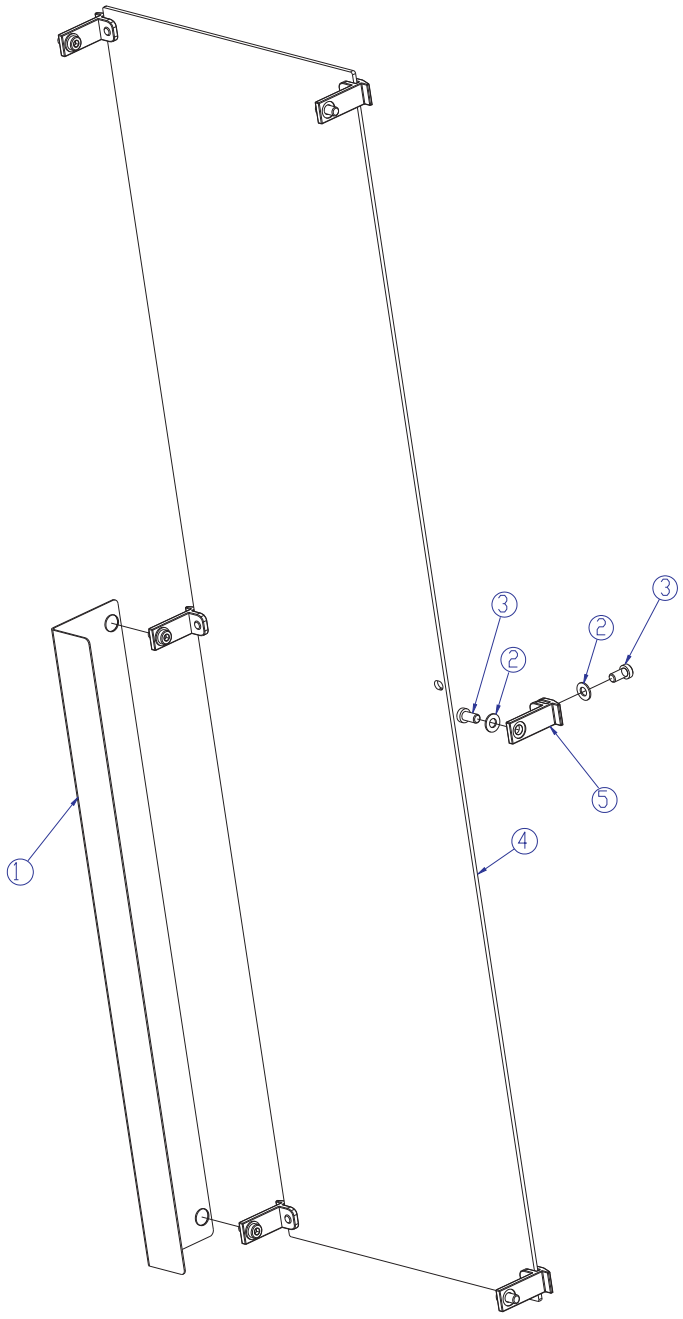


| ITEM NO | QTY | PART NO | DESCRIPTION |
|---|---|---|---|
| 1 | 1 | 7600801 | GUARD, PSFLY KNEE |
| 2 | 12 | 3236601 | WASHER, 3/8 SAE SS |
| 3 | 12 | 3236201 | SCREW, M10 X1.5 20MM |
| 4 | 1 | 7376806 | SHIELD, PS REAR |
| 5 | 6 | 7655301 | BRACKET, PS REAR SHIELD |

# PSFLYSE PECTORAL FLY/REAR DELTOID
# OPTIONAL FULL SHROUD KIT - 7539606

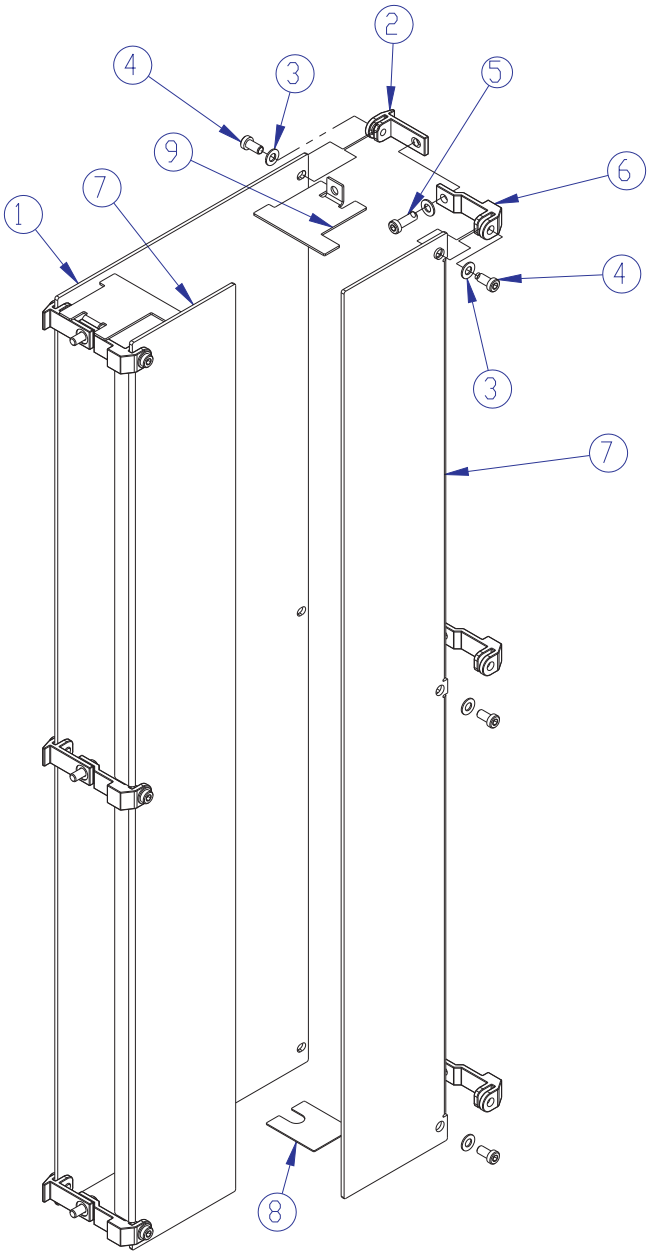


| ITEM NO | QTY | PART NO | DESCRIPTION |
|---|---|---|---|
| 1 | 1 | 7376806 | SHIELD, PS REAR |
| 2 | 6 | 7655301 | BRACKET, PS REAR SHIELD |
| 3 | 18 | 3236601 | WASHER, 3/8 SAE SS |
| 4 | 12 | 3236201 | SCREW, M10 X1.5 20MM |
| 5 | 6 | 3236203 | SCREW, M10 X1.5 30MM |
| 6 | 6 | 7376601 | BRACKET, PS FRONT SHIELD |
| 7 | 2 | 7376906 | SHIELD, PS - FRONT |
| 8 | 2 | 7570901 | PLATE, PS SHIELD STAND-OFF |
| 9 | 2 | 7657401 | PLATE, PRO2 SHROUD SPCR |