Optima Series
OSDAP Dual Adjustable Pulley

OSDAP

CUSTOMER SUPPORT SERVICES

Parts List

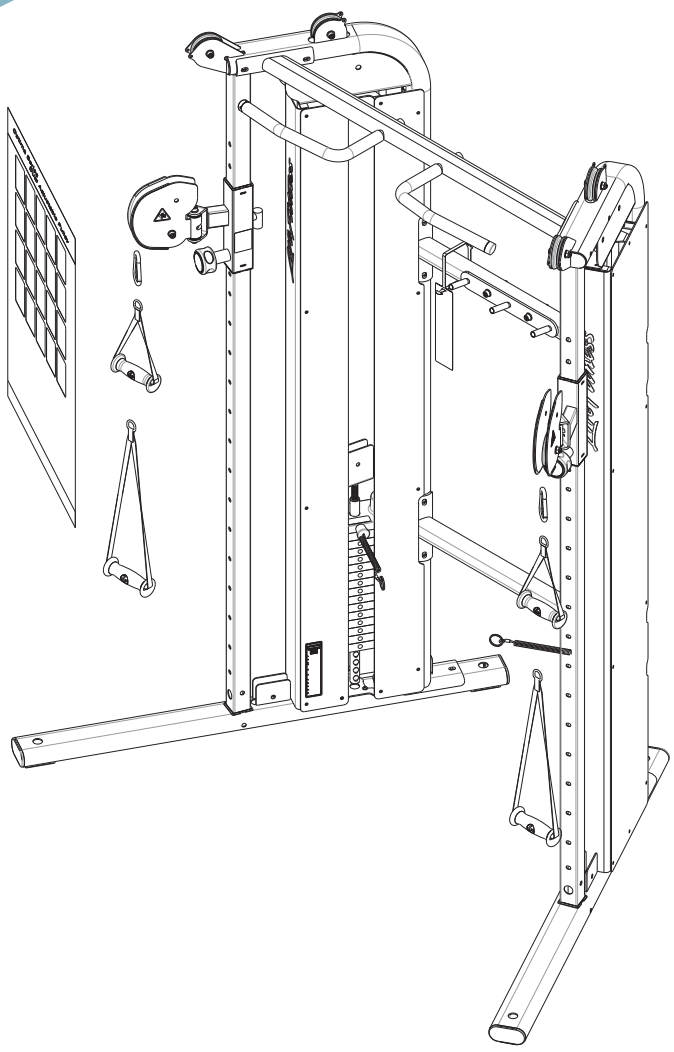

LifeFitness
WHAT WE LIVE FOR

6/04/2012

OSDAP DUAL ADJUSTABLE PULLEY
CONTENTS

FRAME AND UPHOLSTERY COLORS…….…… 3

COMPONENT ASSEMBLY……..…… 4

COMPONENT ASSEMBLY LEGEND…….……. 5

CHIN UP ASSEMBLY……..…… 6

LEFT CARRIAGE ASSEMBLY……..……. 7

LEFT HAND TOP FRAME ASSEMBLY…….. 8

FRAME BRACKET ASSEMBLY……..…… 9

LEFT FRONT SHROUD ASSEMBLY……..…… 10

LEFT HAND BOTTOM FRAME ASSEMBLY……..……. 11

ACCESSORY CROSS BRACE ASSEMBLY……. 12

CROSS BRACE ASSEMBLY…… 13

FRAME, SHROUD AND HARDWARE COMPONENTS……..…. 14

RIGHT CARRIAGE ASSEMBLY……..…… 15

RIGHT HAND TOP FRAME ASSEMBLY……..…. 16

RIGHT HAND BOTTOM FRAME ASSEMBLY…… 17

GUIDE ROD COMPONENTS ……..……... 18

HEAD PLATE ASSEMBLY……..…… 19

WEIGHT STACK LABELS……..……. 20

MANUALS……..…… 21

ACCESSORIES……..…… 22

IMAGE……..…… 23

OSDAP DUAL ADJUSTABLE PULLEY FRAME AND UPHOLSTERY COLORS

Strength Frame Colors



Note: Include frame color in pick-slip notes when ordering frame assemblies or weldments.

Strength Upholstery Colors

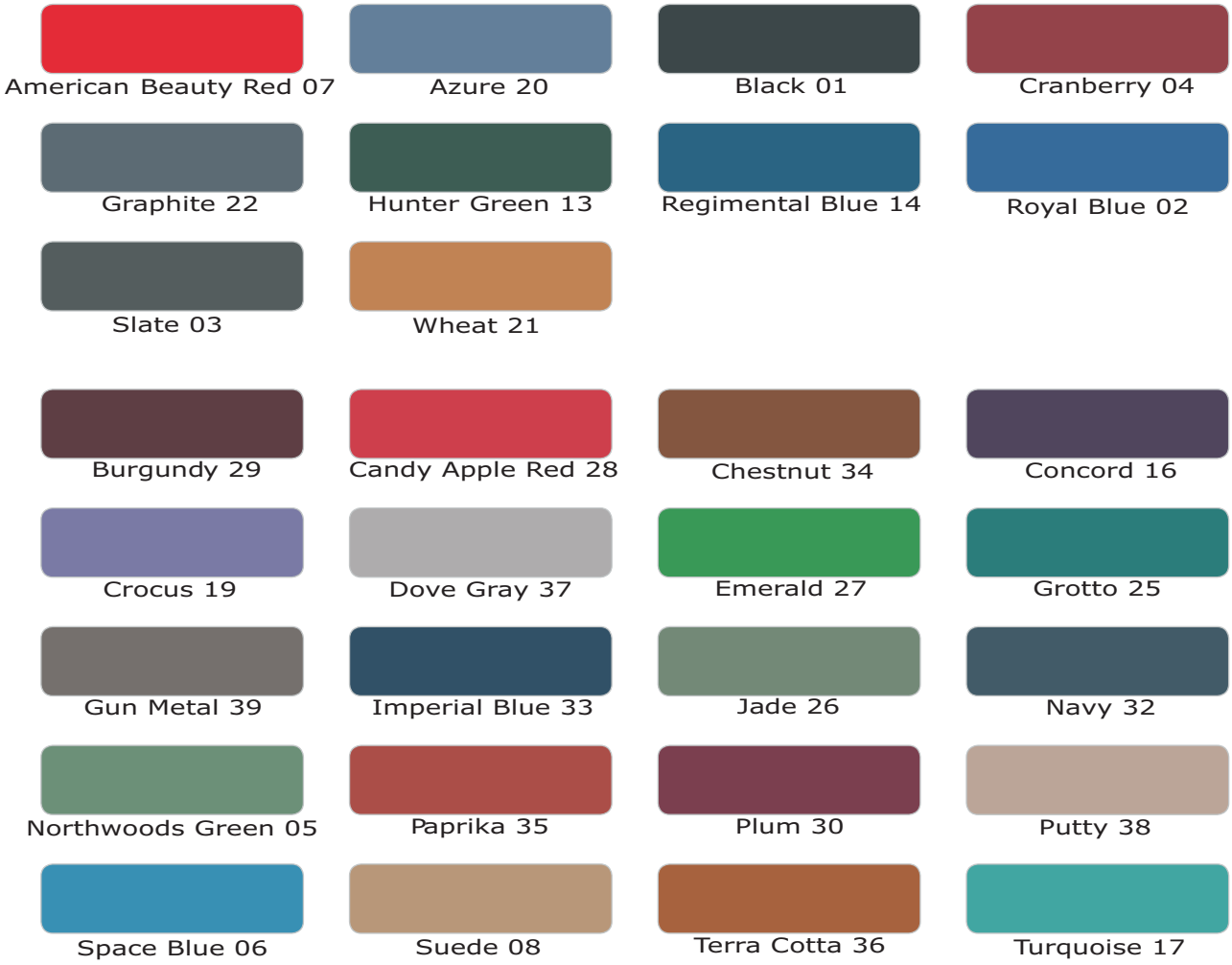

Replace XX with above color suffix when ordering pads (ie. 74123XX = 7412301 BLACK)

OSDAP DUAL ADJUSTABLE PULLEY COMPONENT ASSEMBLY

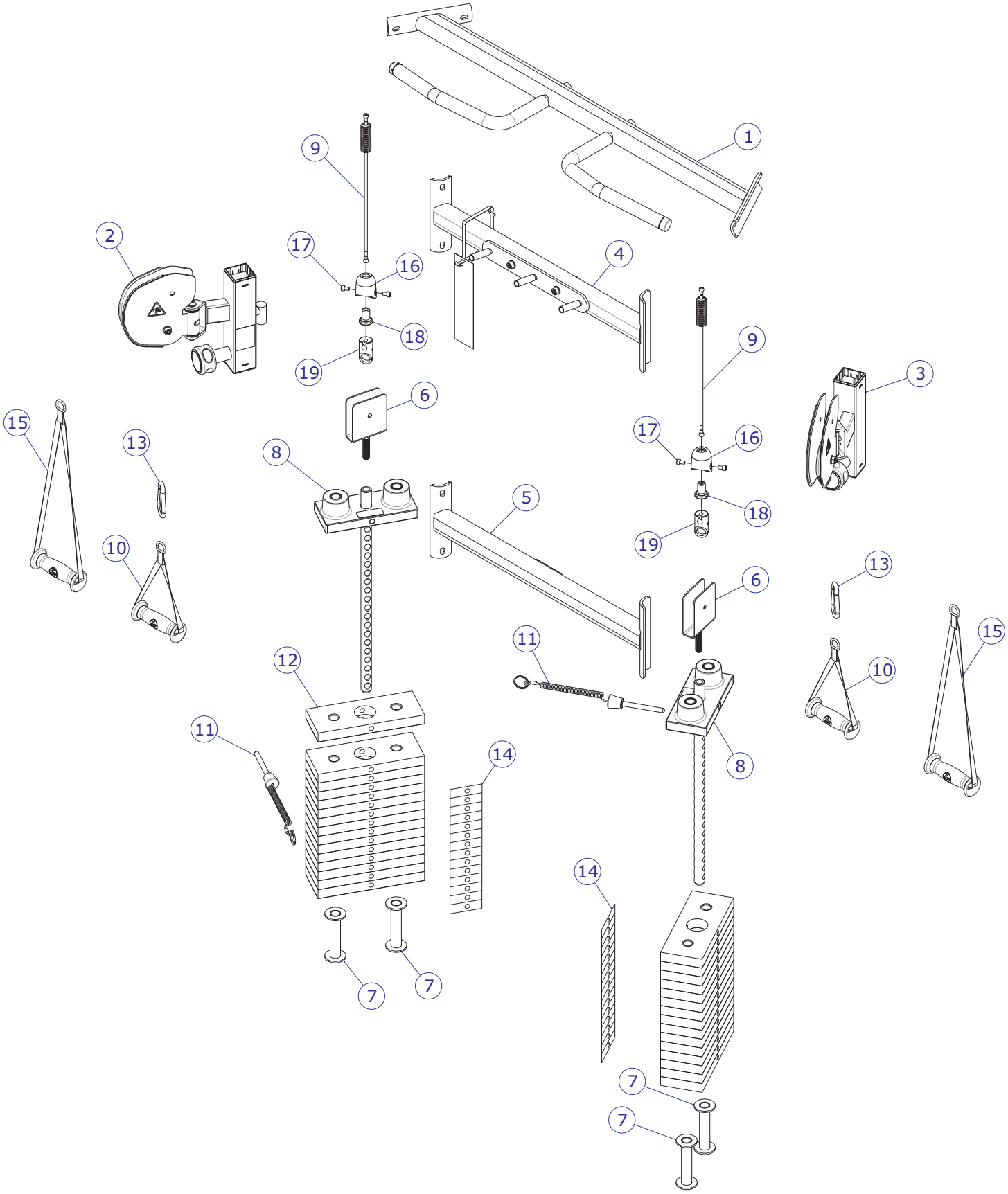

SEE PAGE 5 FOR LEGEND

OSDAP DUAL ADJUSTABLE PULLEY
COMPONENT ASSEMBLY LEGEND

ITEM NO.	QTY.	PART NO.	DESCRIPTION	FRAME COLOR
1	1	87875XX	ASSY, OSDAP, CHIN UP	ANY
2	1	88597XX	ASSY, OSDAP, CARRIAGE, LEFT	ANY
3	1	88599XX	ASSY, OSDAP, CARRIAGE, RIGHT	ANY
4	1	88562XX	ASSY, OSDAP, X-BRACE, ACC	ANY
5	1	89800XX	ASSY, OSDAP, X-BRACE	ANY
6	2	8861795	WLDMT, OSDAP, HEAD PLATE PULLEY	SG
7	4	8924595	WLDMT, OSDAP, WT STACK SPACER	SG
8	2	8931101	ASSY, OSDAP, HEAD PLATE, FINAL	-
9	2	9138301	CABLE, OSDAP	-
10	2	8219601	HANDLE, CM/MJ, SHORT STRAP	-
11	2	8506101	ASSY, SELECTOR PIN	-
12	30	7353701	ASSY, 10 LB PLATE	-
13	2	3250201	SNAP LINK, 3/8 IN. DIA	-
14	2	8947601	LABEL, WEIGHT STACK, 21 PLATE	-
15	2	8219701	HANDLE, CM/MJ, LONG STRAP	-
16	2	8943701	HSNG, CM/MJ, CABLE END	-
17	4	3250002	M5 X 0.8 HXS SOC CS ST BZ X 8	-
18	2	8943801	INSERT, CM/MJ, CABLE END	-
19	2	8943601	LINK, CM/MJ, CABLE END	-

OSDAP DUAL ADJUSTABLE PULLEY
CHIN UP ASSEMBLY - 87875XX

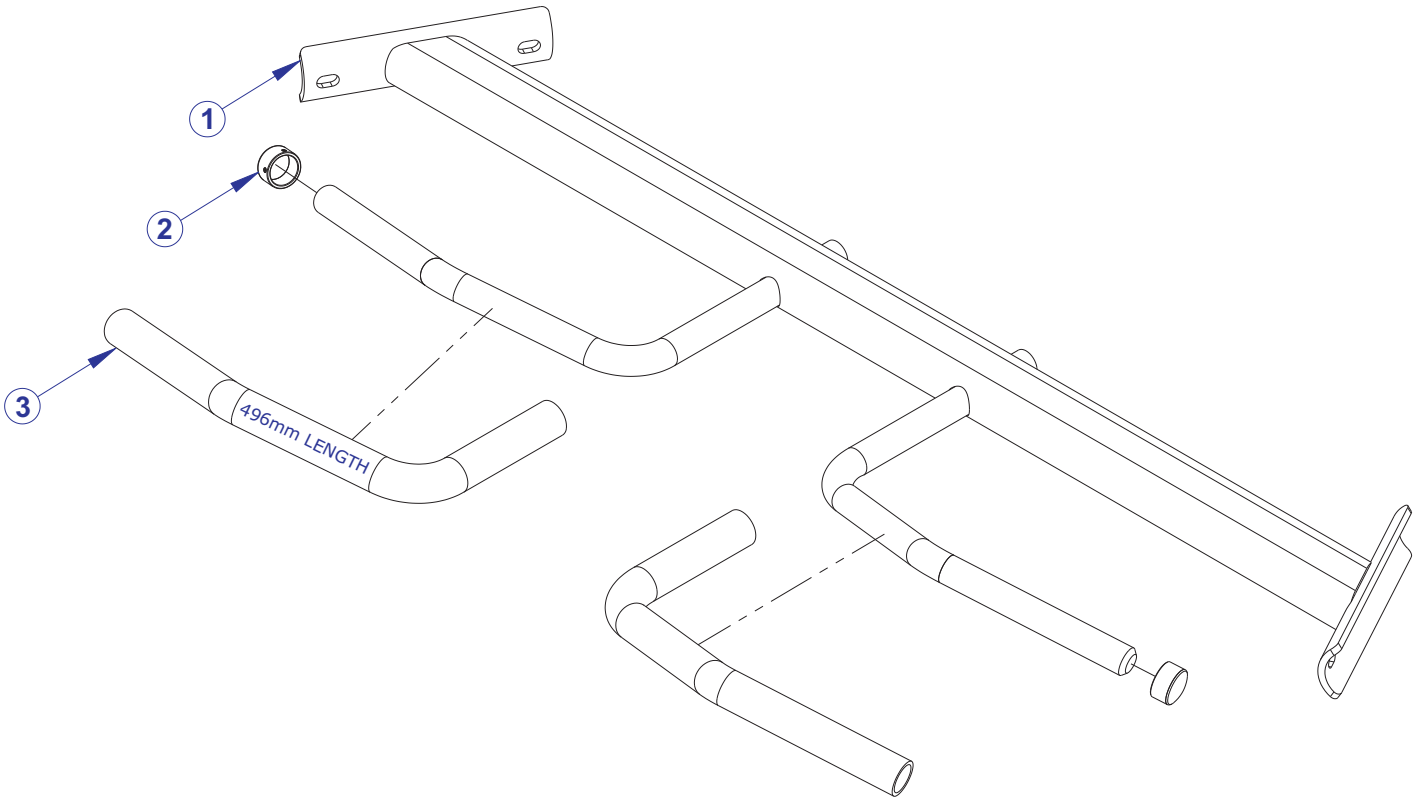

ITEM NO.	QTY.	PART NO.	DESCRIPTION	FRAME COLOR
1	1	87875XX	ASSY, OSDAP, CHIN UP	ANY
2	2	7662901	CAP, GRIP 1.25 OD	-
3	2	3235801	GRIP, 1.25 OD X .125 WALL OPEN END	-

OSDAP DUAL ADJUSTABLE PULLEY
LEFT CARRIAGE ASSEMBLY - 88597XX

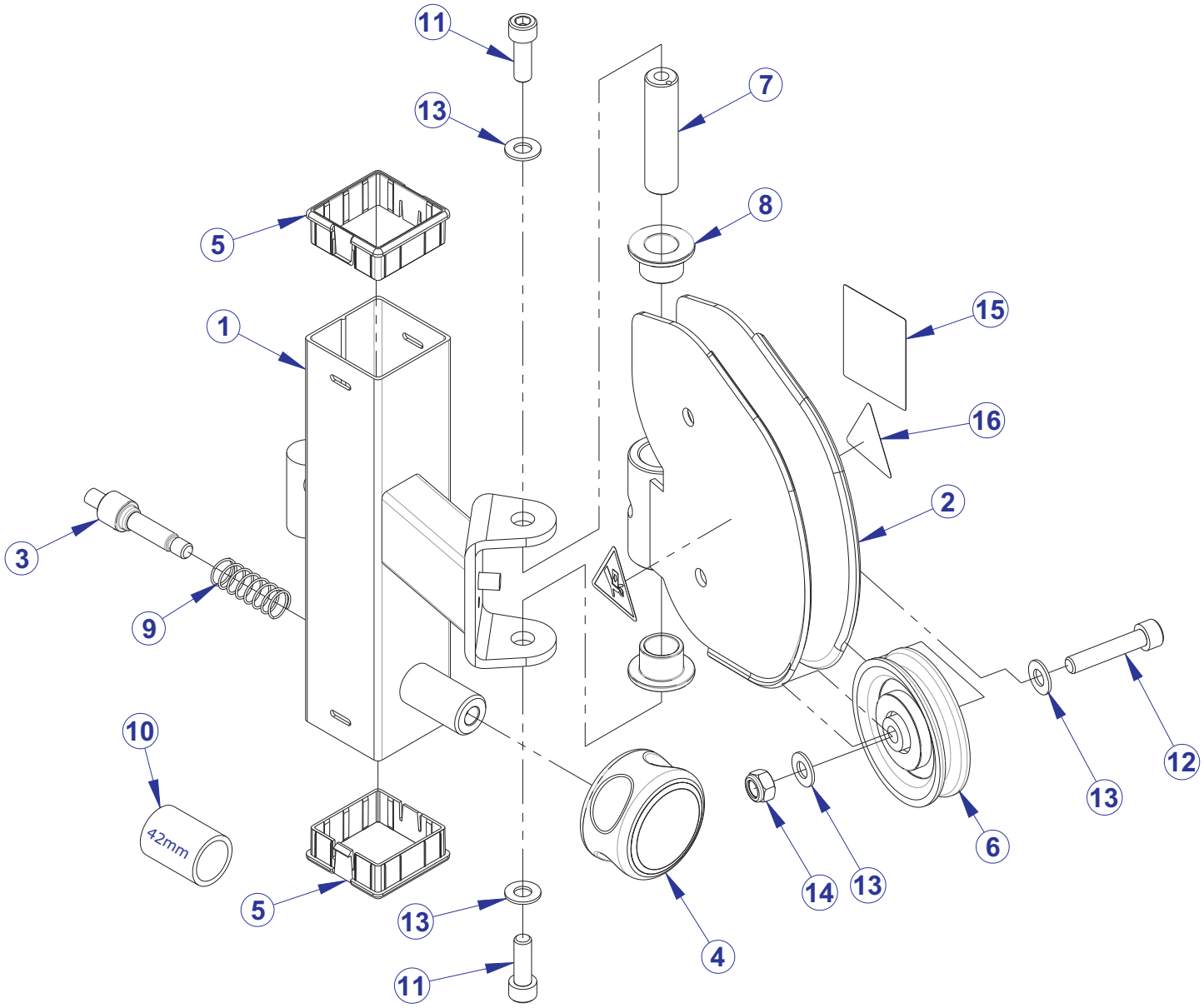

ITEM NO.	QTY.	PART NO.	DESCRIPTION	FRAME COLOR
1	1	88595XX	WLDMT, OSDAP, CARRIAGE, LH	ANY
2	1	88596XX	WLDMT, OSDAP, SWIVEL PULLEY	ANY
3	1	8924001	ASSY, OSDAP PULL PIN, BEVEL NOSE	-
4	1	8396301	ASSY, OVERMOLD GRIP	-
5	2	8920301	BUSHING, OSDAP CARRIAGE	-
6	1	3245701	PULLEY, 3.5" OD, 10MM ID SG	-
7	1	8452606	SHAFT, 19MM DIA X 76.375MM	-
8	2	3266603	BEARING FLG, 19MM ID X 25 OD X 19.1	-
9	1	7351502	SPRING, PULL PIN LARGE	-
10	1	3235801	GRIP, 1.25 X .125 WALL OPEN END	-
11	2	3251703	SCREW, M10 X1.5 30MM	-
12	1	3251707	SCREW, M10 X1.5 50MM	-
13	4	3102514	WASHER, FLAT 3/8" SAE ST ZN	-
14	1	3242002	NUT, M10 X 1.5 HEX NYLOCK	-
15	1	8973301	LABEL, WARNING ADJ. CARRIAGE, OSDAP, LEFT	-
16	2	8039501	LABEL, WARNING,TRIANGLE	-

OSDAP DUAL ADJUSTABLE PULLEY
LEFT HAND TOP FRAME ASSEMBLY - 88567XX

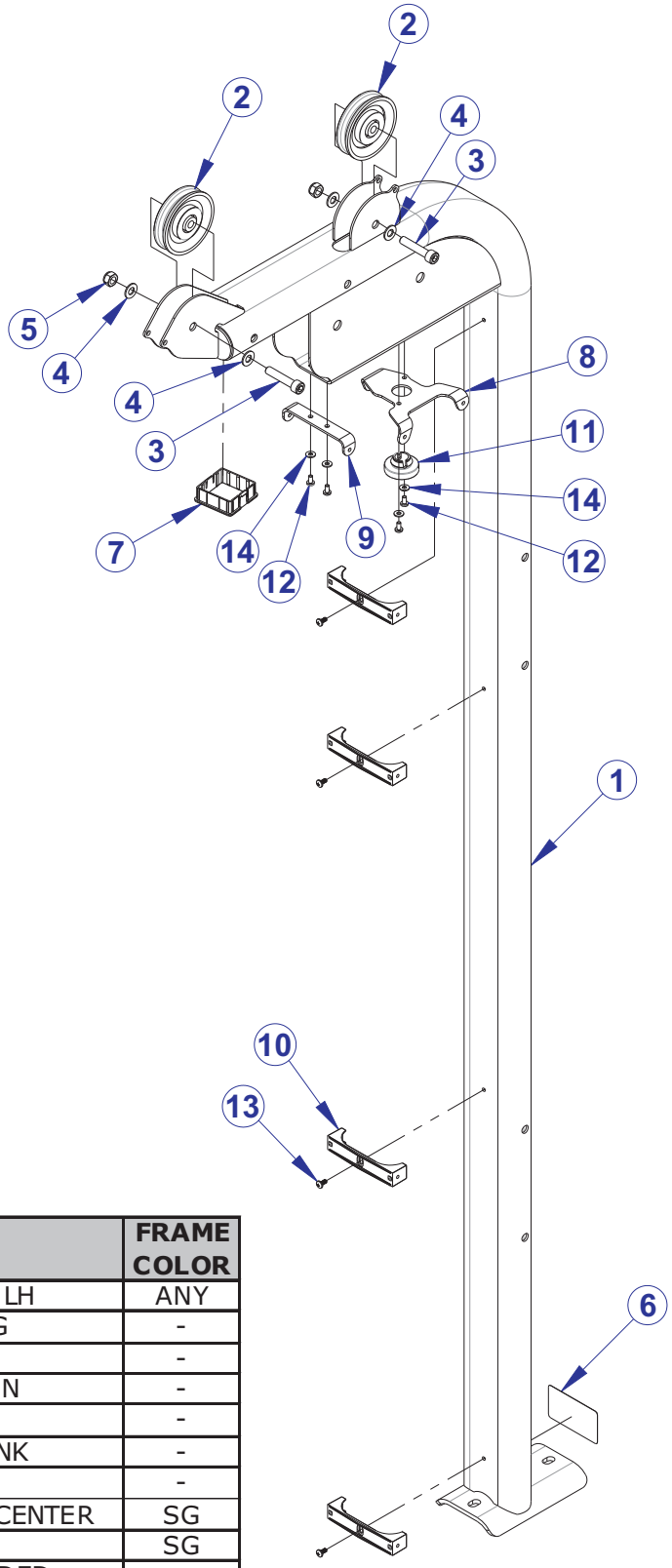

ITEM NO.	QTY.	PART NO.	DESCRIPTION	FRAME COLOR
1	1	88566XX	WLDMT, OSDAP, TOP FRAME, LH	ANY
2	2	3245701	PULLEY, 3.5" OD, 10MM ID SG	-
3	2	3251707	SCREW, M10 X1.5 50MM	-
4	4	3102514	WASHER, FLAT 3/8" SAE ST ZN	-
5	2	3242002	NUT, M10 X 1.5 HEX NYLOCK	-
6	1	7571301	LABEL, SERIAL NUMBER, BLANK	-
7	1	8920302	BUSHING, OSDAP FRAME	-
8	1	8924795	BRACKET, OSDAP, SHROUD, CENTER	SG
9	1	8857395	BRACKET, OSDAP, SHROUD	SG
10	4	8924201	BRKT, OSDAP, SHROUD, MOLDED	-
11	1	7642301	BUMPER, CM/MJ, PLUG	-
12	4	3239101	SCREW, M5X10 PHL PAN TT ST	-
13	4	3271601	SCREW, M5 X 10 PHL PAN MS ST ZN	-
14	4	3114407	WASHER, SAE #10	-

OSDAP DUAL ADJUSTABLE PULLEY
FRAME BRACKET ASSEMBLY - 89440XX

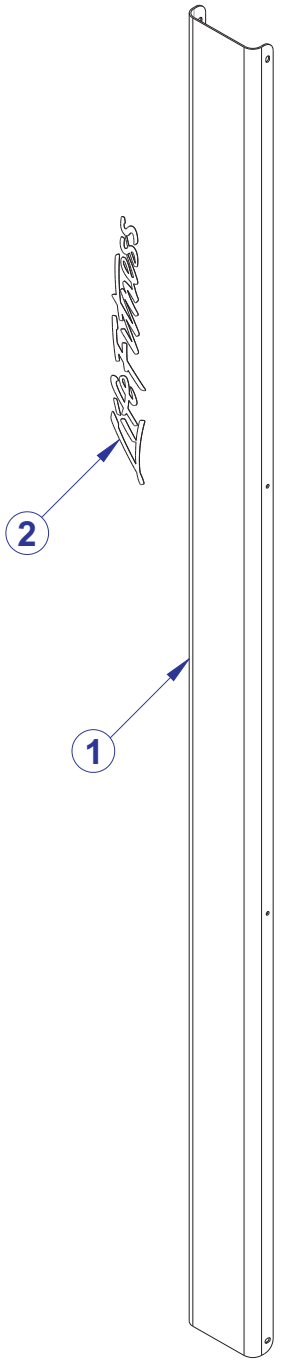

ITEM NO.	QTY.	PART NO.	DESCRIPTION	FRAME COLOR
1	1	89440XX	ASSY, OSDAP, FRAME BRKT	ANY
2	1	8317001	LABEL, LIFE FIT 63.5MM X 381MM	-

OSDAP DUAL ADJUSTABLE PULLEY
LEFT FRONT SHROUD ASSEMBLY - 8978301

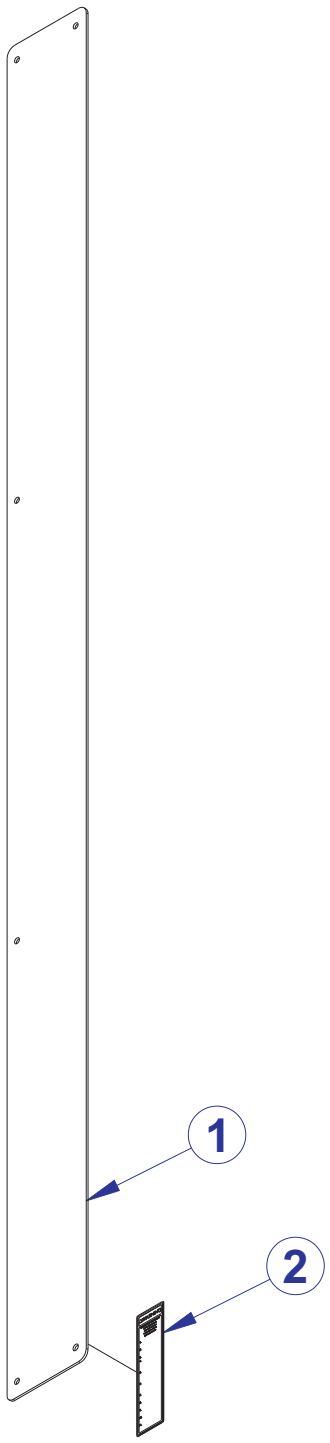

ITEM NO.	QTY.	PART NO.	DESCRIPTION
1	1	8978301	ASSY, OSDAP, FRONT SHROUD, LEFT
2	1	8630801	LABEL, ASTM WARN, SELECT SHEET

OSDAP DUAL ADJUSTABLE PULLEY
LEFT HAND BOTTOM FRAME ASSEMBLY - 88570XX

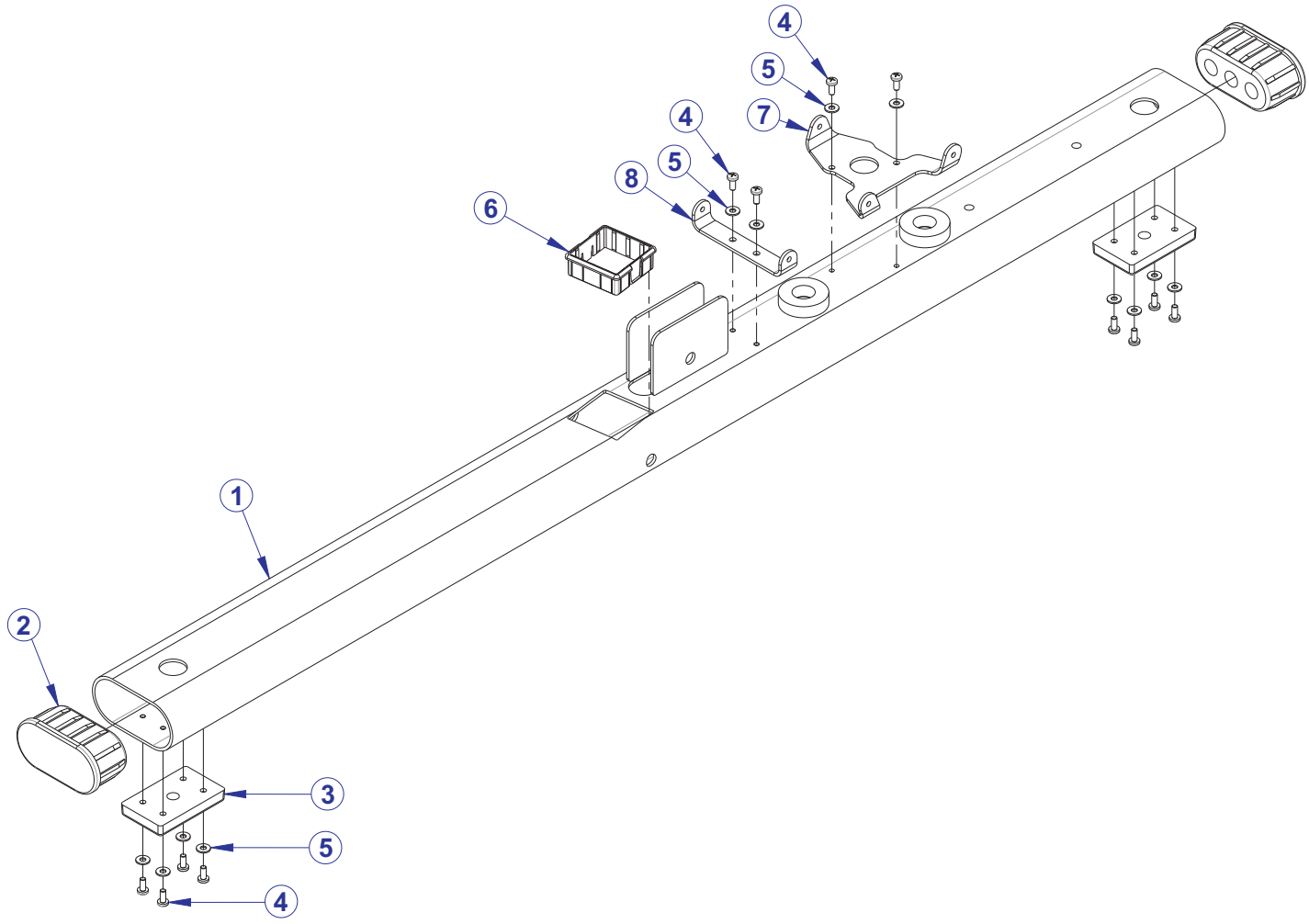

ITEM NO.	QTY.	PART NO.	DESCRIPTION	FRAME COLOR
1	1	88589XX	WLDMT, OSDAP, BOTTOM FRAME, LH	ANY
2	2	8012901	CAP, MFLOV END	-
3	2	7810801	PAD, RUBBER FOOT	-
4	12	3239102	SCREW, M5X12 PHL PAN TT ST BZ	-
5	12	3114407	WASHER, SAE #10	-
6	1	8920302	BUSHING, OSDAP FRAME	-
7	1	8924795	BRACKET, OSDAP, SHROUD, CENTER	SG
8	1	8857395	BRACKET, OSDAP, SHROUD	SG

OSDAP DUAL ADJUSTABLE PULLEY
ACCESSORY CROSS BRACE ASSEMBLY - 88562XX

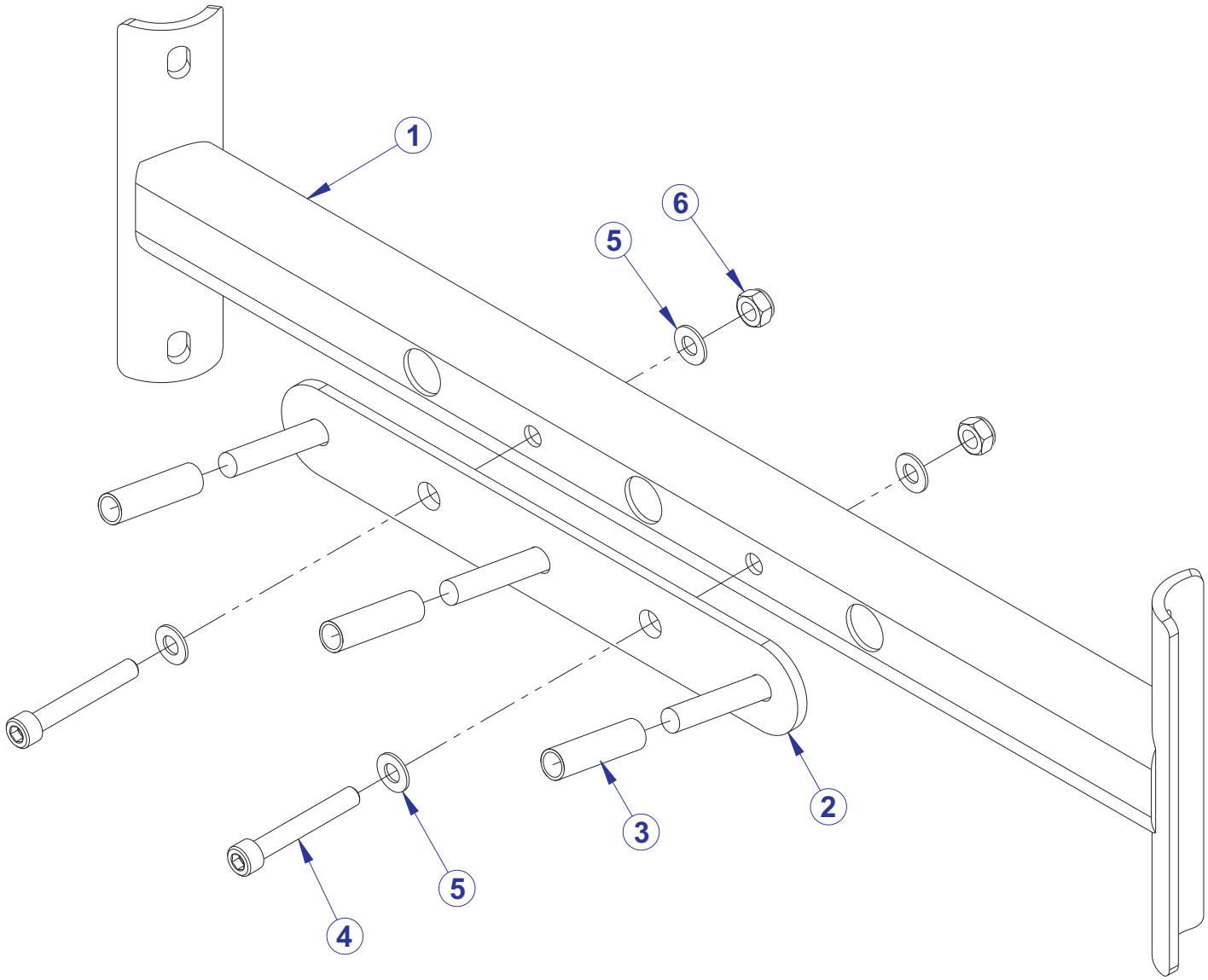

ITEM NO.	QTY.	PART NO.	DESCRIPTION	FRAME COLOR
1	1	88568XX	WLDMT, OSDAP, X-BRACE, ACC	ANY
2	1	7644895	WLDMT, CM ACC RACK	SG
3	3	7749601	SLEEVE, .50" ID X 2.25"	-
4	2	3251711	SCREW, M10 X1.5 70MM	-
5	4	3102514	WASHER, FLAT 3/8" SAE ST ZN	-
6	2	3242002	NUT, M10 X 1.5 HEX NYLOCK	-

OSDAP DUAL ADJUSTABLE PULLEY
CROSS BRACE ASSEMBLY - 89800XX

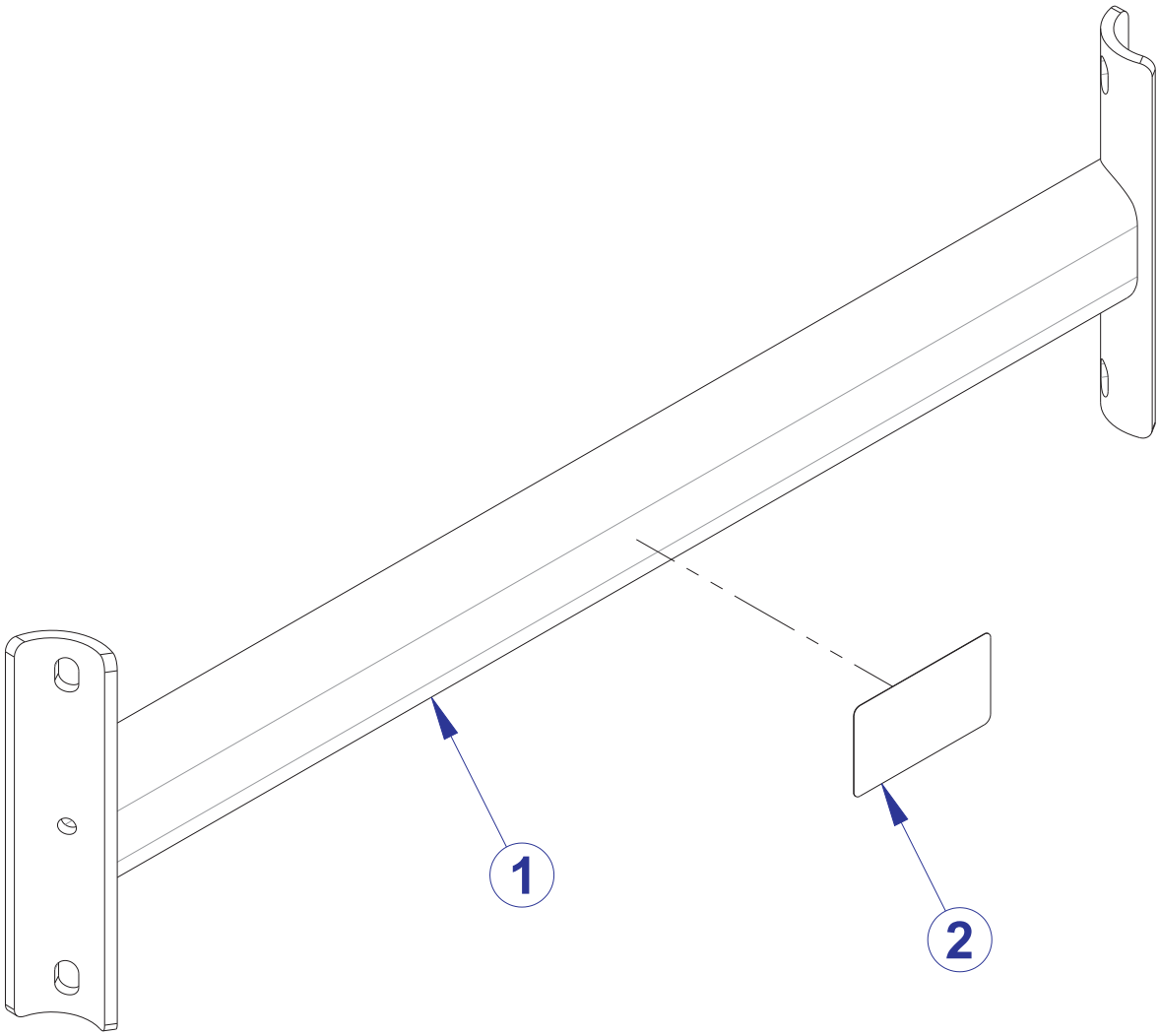

ITEM NO.	QTY.	PART NO.	DESCRIPTION	FRAME COLOR
1	1	89800XX	ASSY, OSDAP, X-BRACE	ANY
2	1	7571301	LABEL, SERIAL NUMBER, BLANK	-

OSDAP DUAL ADJUSTABLE PULLEY
FRAME, SHROUD AND HARDWARE COMPONENTS

LEFT SIDE

RIGHT SIDE

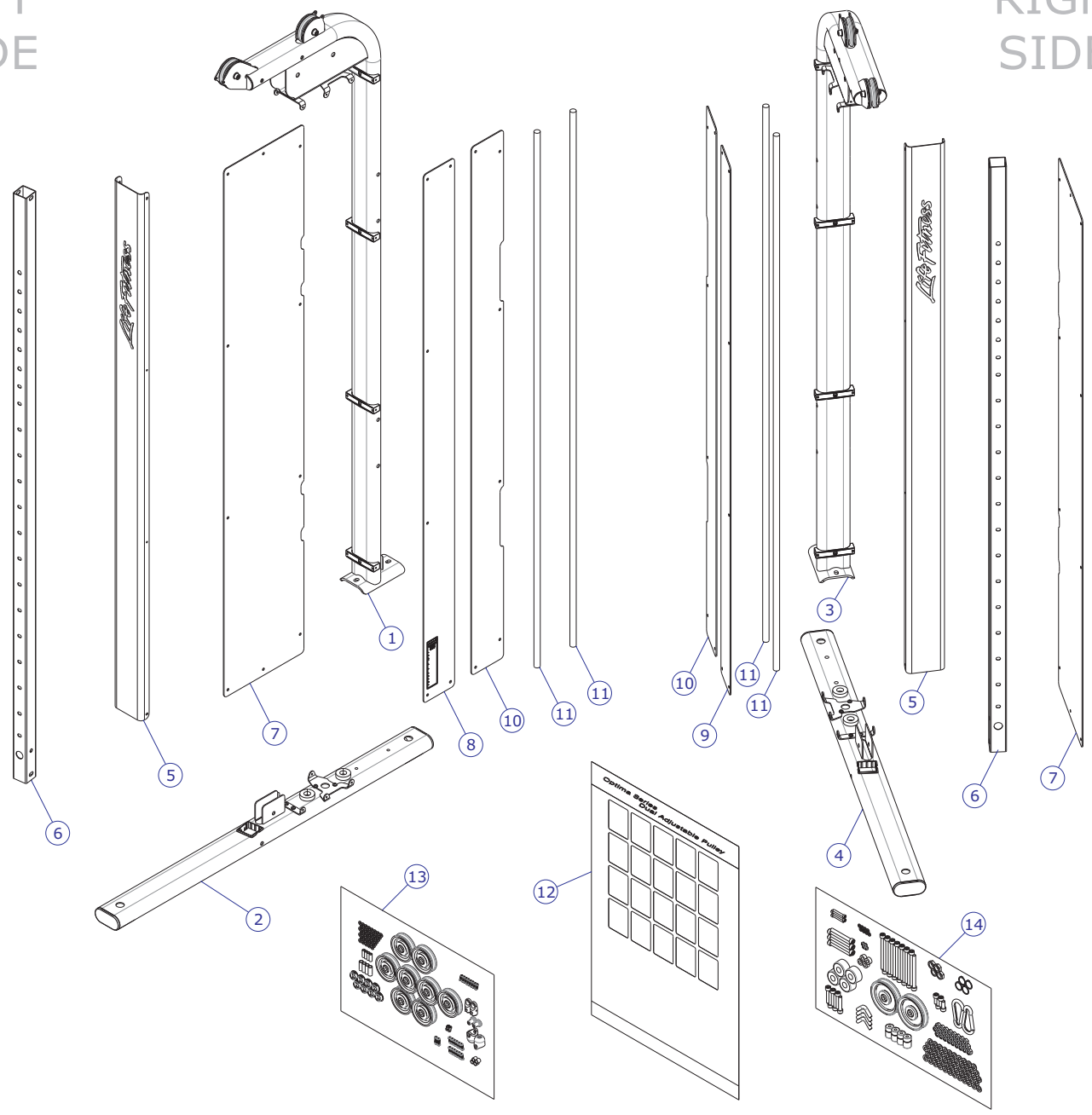

ITEM NO.	QTY.	PART NO.	DESCRIPTION	FRAME COLOR
1	1	88567XX	ASSY, OSDAP, TOP FRAME, LH	ANY
2	1	88570XX	ASSY, OSDAP, BOTTOM FRAME, LH	ANY
3	1	88619XX	ASSY, OSDAP, TOP FRAME, RH	ANY
4	1	88622XX	ASSY, OSDAP, BOTTOM FRAME, RH	ANY
5	2	89440XX	ASSY, OSDAP, FRAME BRKT	ANY
6	2	8858601	TUBE, OSDAP, CABLE COLUMN	-
7	2	8863301	SHROUD, OSDAP, REAR	-
8	1	8978301	ASSY, OSDAP, FRONT SHROUD, LEFT	-
9	1	8863601	SHROUD, OSDAP, FRONT INSIDE	-
10	2	8863201	SHROUD, OSDAP, FRONT OUTSIDE	-
11	4	7328623	GUIDE ROD, .75 OD SOLID 77.25	-
12	1	8695001	MANUAL, OSDAP, POSTER	-
13	1	9139001	ASSY, OSDAP, BLISTER PACK, SMALL	-
14	1	8981201	ASSY, OSDAP, BLISTER PACK, LARGE	-

OSDAP DUAL ADJUSTABLE PULLEY
RIGHT CARRIAGE ASSEMBLY - 88599XX

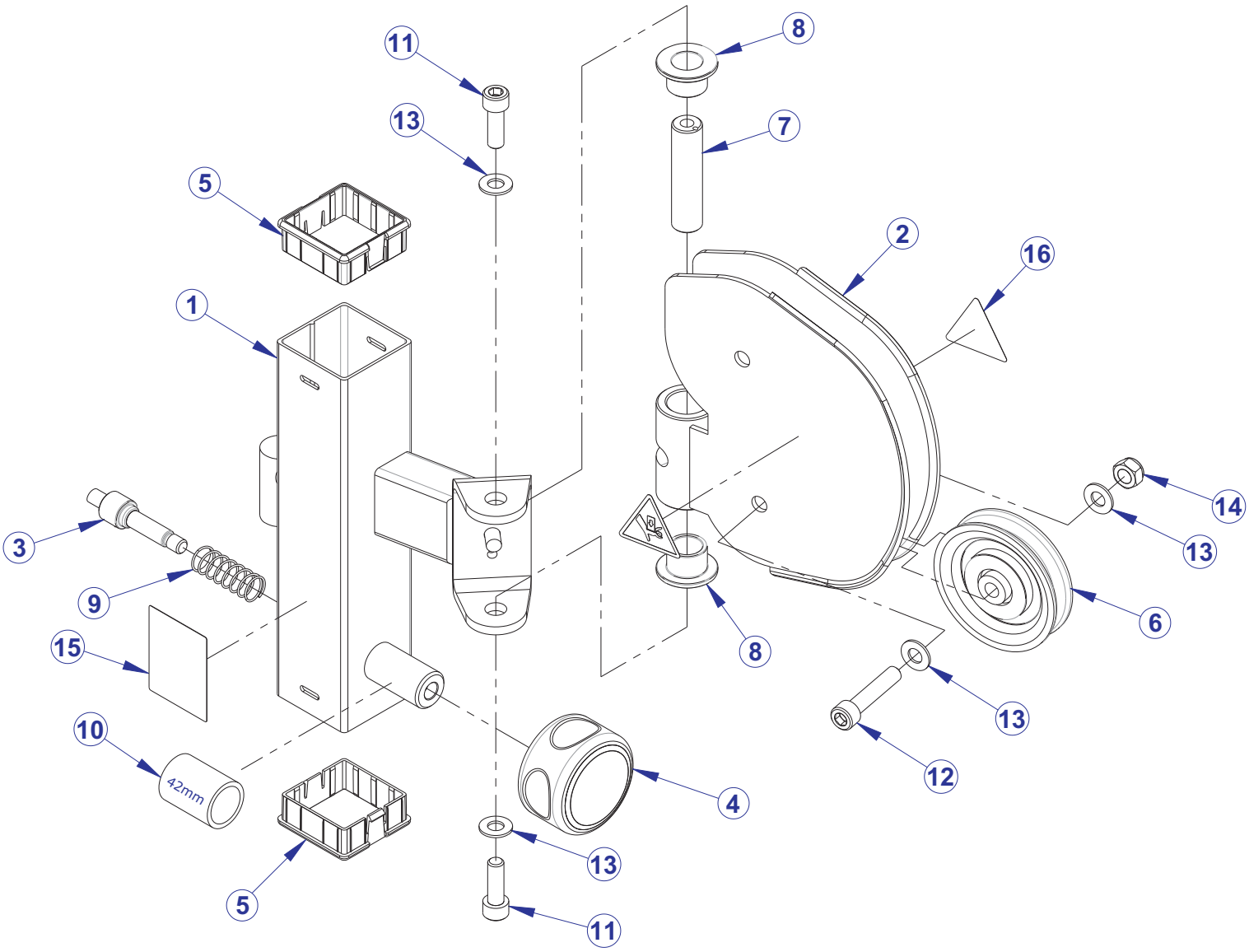

ITEM NO.	QTY.	PART NO.	DESCRIPTION	FRAME COLOR
1	1	88598XX	WLDMT, OSDAP, CARRIAGE, RIGHT	ANY
2	1	88596XX	WLDMT, OSDAP, SWIVEL PULLEY	ANY
3	1	8924001	ASSY, OSDAP PULL PIN, BEVEL NOSE	-
4	1	8396301	ASSY, OVERMOLD GRIP	-
5	2	8920301	BUSHING, OSDAP CARRIAGE	-
6	1	3245701	PULLEY, 3.5" OD, 10MM ID SG	-
7	1	8452606	SHAFT, 19MM DIA X 76.375MM	-
8	2	3266603	BEARING FLG, 19MM ID X 25 OD X 19.1	-
9	1	7351502	SPRING, PULL PIN LARGE	-
10	1	3235801	GRIP, 1.25 X .125 WALL OPEN END	-
11	2	3251703	SCREW, M10 X1.5 30MM	-
12	1	3251707	SCREW, M10 X1.5 50MM	-
13	4	3102514	WASHER, FLAT 3/8" SAE ST ZN	-
14	1	3242002	NUT, M10 X 1.5 HEX NYLOCK	-
15	1	8973302	LABEL, WARNING ADJ. CARRIAGE, OSDAP, RIGHT	-
16	2	8039501	LABEL, WARNING,TRIANGLE	-

OSDAP DUAL ADJUSTABLE PULLEY
RIGHT HAND TOP FRAME ASSEMBLY - 88619XX

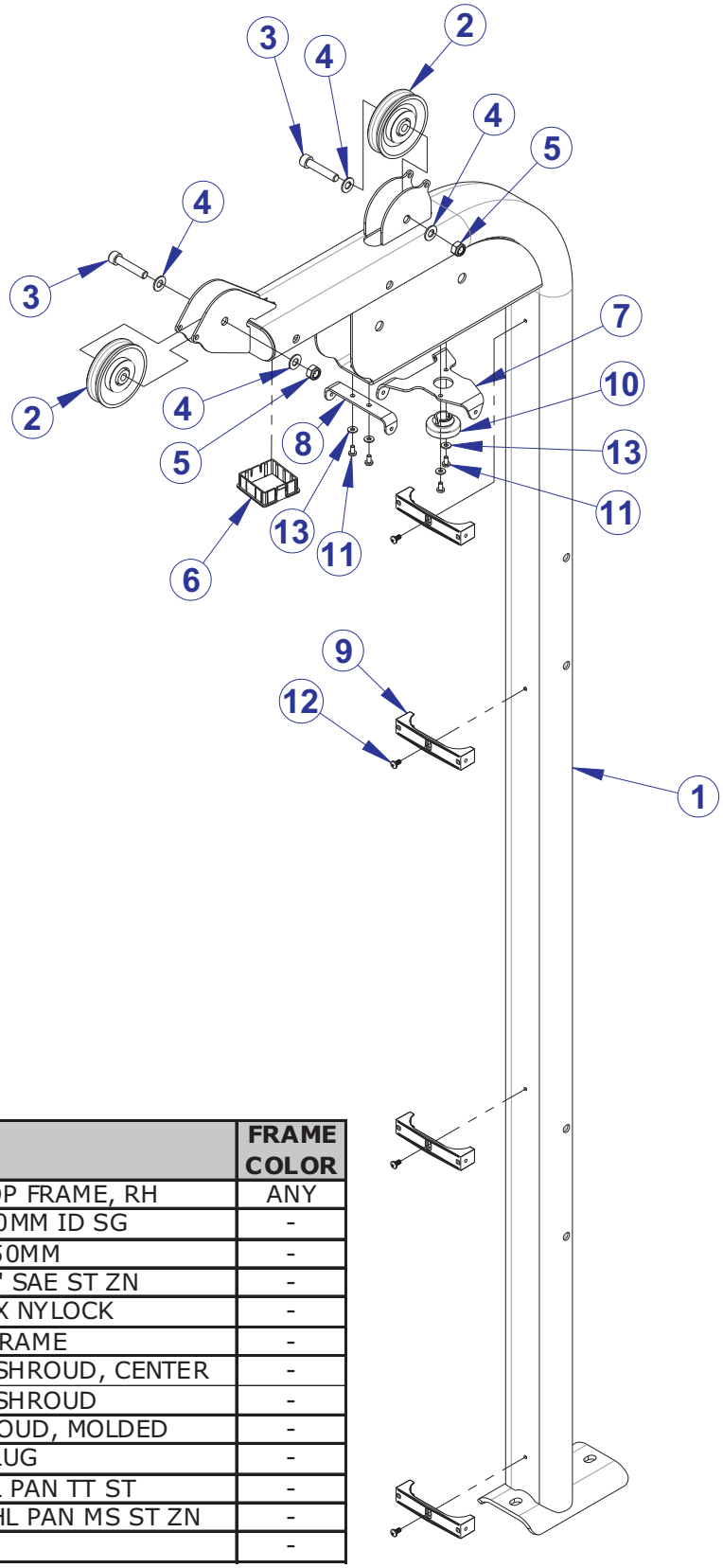

ITEM NO.	QTY.	PART NO.	DESCRIPTION	FRAME COLOR
1	1	88618XX	WLDMT, OSDAP, TOP FRAME, RH	ANY
2	2	3245701	PULLEY, 3.5" OD, 10MM ID SG	-
3	2	3251707	SCREW, M10 X1.5 50MM	-
4	4	3102514	WASHER, FLAT 3/8" SAE ST ZN	-
5	2	3242002	NUT, M10 X 1.5 HEX NYLOCK	-
6	1	8920302	BUSHING, OSDAP FRAME	-
7	1	8924795	BRACKET, OSDAP, SHROUD, CENTER	-
8	1	8857395	BRACKET, OSDAP, SHROUD	-
9	4	8924201	BRKT, OSDAP, SHROUD, MOLDED	-
10	1	7642301	BUMPER, CM/MJ, PLUG	-
11	4	3239101	SCREW, M5X10 PHL PAN TT ST	-
12	4	3271601	SCREW, M5 X 10 PHL PAN MS ST ZN	-
13	4	3114407	WASHER, SAE #10	-

OSDAP DUAL ADJUSTABLE PULLEY
RIGHT HAND BOTTOM FRAME ASSEMBLY - 88622XX

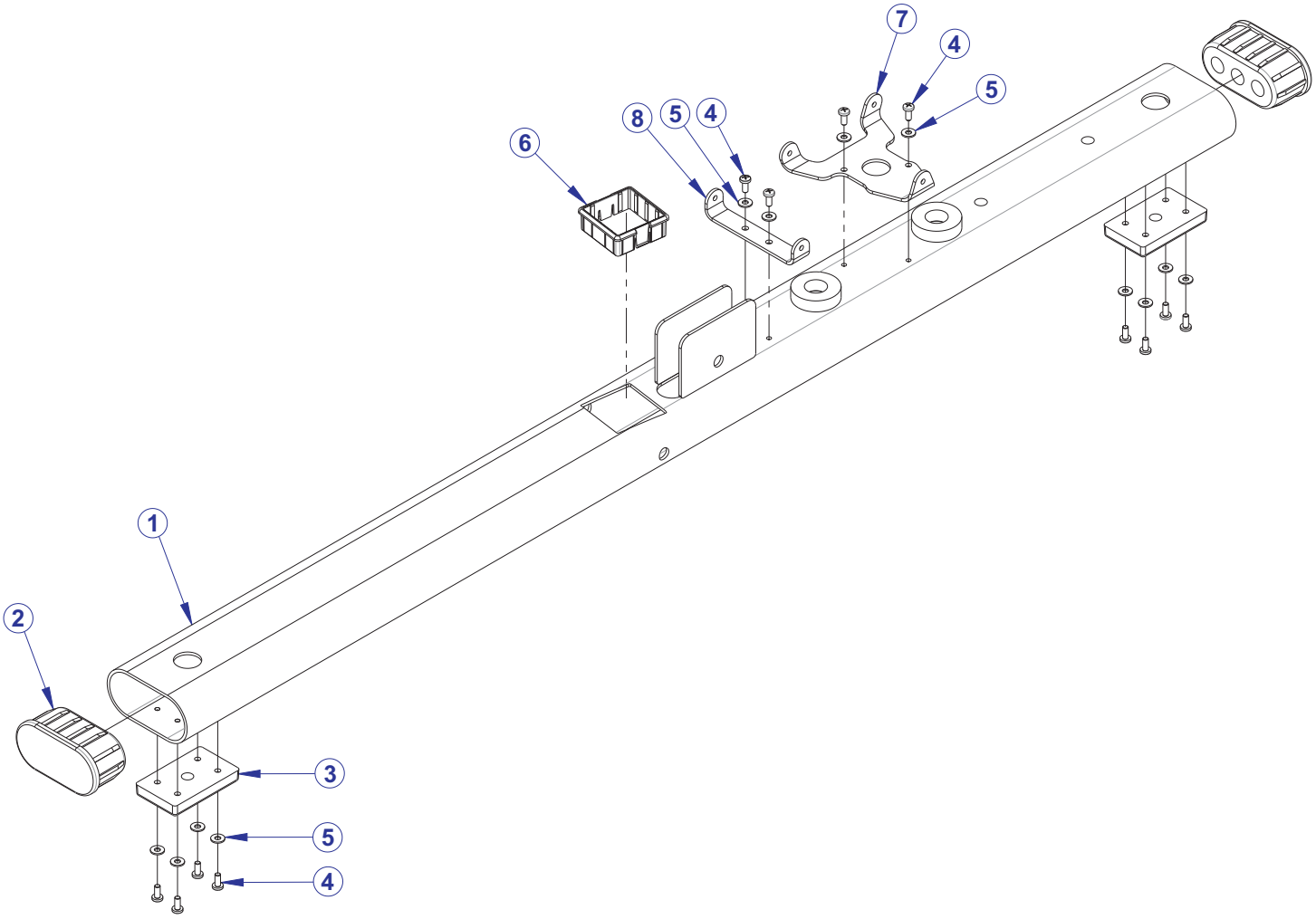

ITEM NO.	QTY.	PART NO.	DESCRIPTION	FRAME COLOR
1	1	88621XX	WLDMT, OSDAP, BOTTOM FRAME, RH	ANY
2	2	8012901	CAP, MFLOV END	-
3	2	7810801	PAD, RUBBER FOOT	-
4	12	3239102	SCREW, M5X12 PHL PAN TT ST BZ	-
5	12	3114407	WASHER, SAE #10	-
6	1	8920302	BUSHING, OSDAP FRAME	-
7	1	8924795	BRACKET, OSDAP, SHROUD, CENTER	SG
8	1	8857395	BRACKET, OSDAP, SHROUD	SG

OSDAP DUAL ADJUSTABLE PULLEY
GUIDE ROD COMPONENTS

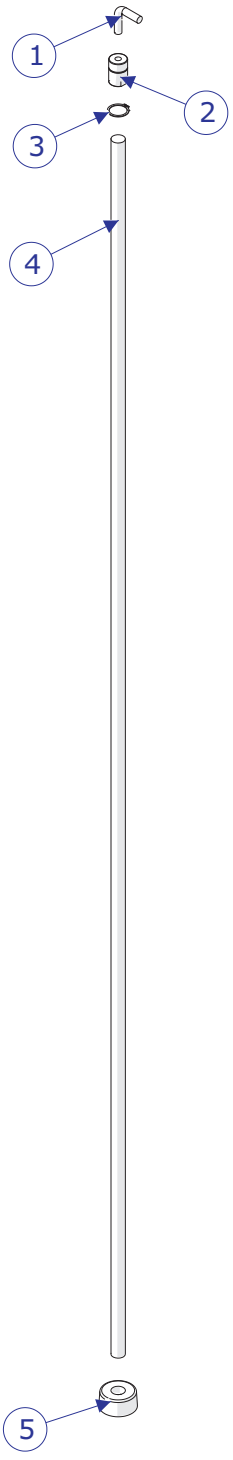

ITEM NO.	QTY.	PART NO.	DESCRIPTION
1	1	8974701	M10 RIGHT ANGLE SCREW
2	1	8692801	RETAINER, GUIDE ROD, SHORT
3	1	3232421	RING:BRE .940 5100-100 ST PP B
4	1	7328623	GUIDE ROD, .75 OD SOLID 77.25
5	1	7352101	CUSHION, WEIGHT STACK

OSDAP DUAL ADJUSTABLE PULLEY
HEAD PLATE ASSEMBLY - 8931101

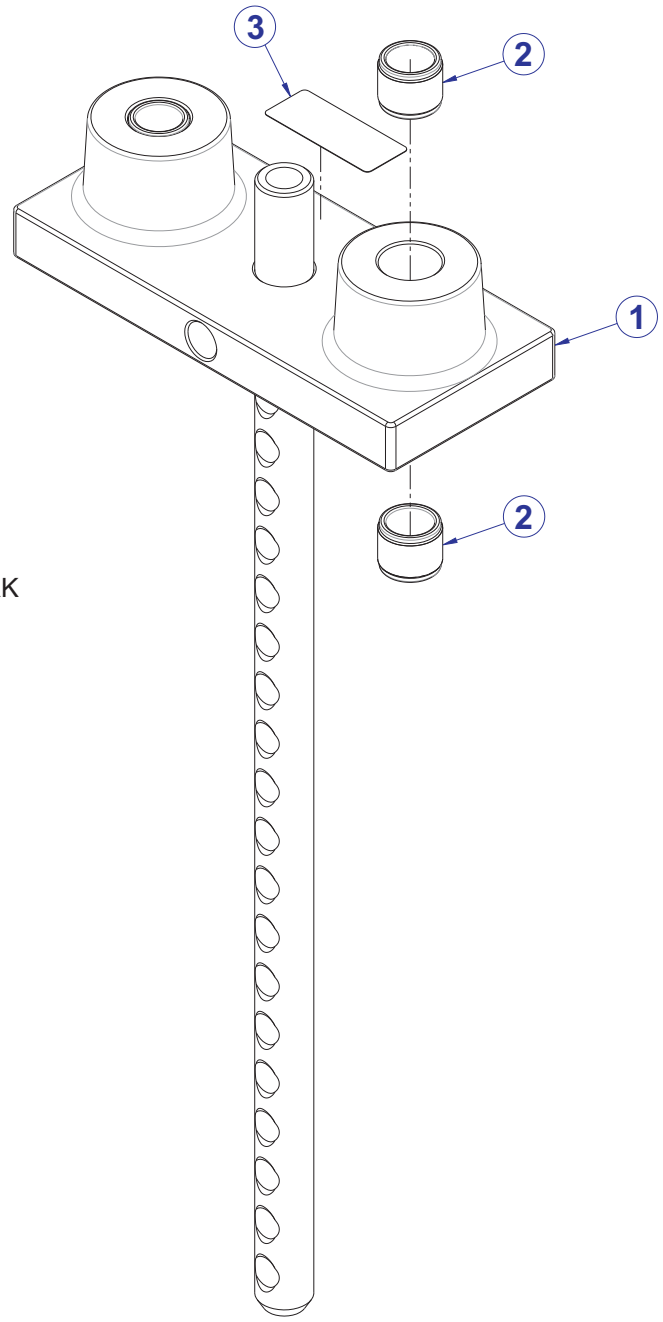

8971101 ARTWORK

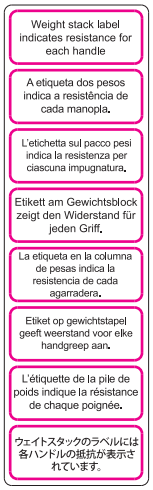

ITEM NO.	QTY.	PART NO.	DESCRIPTION
1	1	8931101	ASSY, OSDAP, HEAD PLATE, FINAL
2	4	3236101	BUSHING, WEIGHT PLATE
3	1	8971101	LABEL, WEIGHT AT HANDLE, SELECT

OSDAP DUAL ADJUSTABLE PULLEY WEIGHT STACK LABELS - 8947601

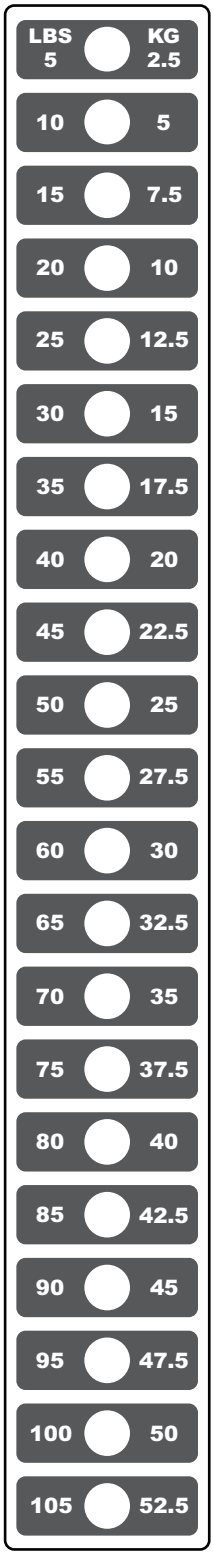

SAME LABELS USED FOR STANDARD (16) OR OPTIONAL (21) PLATE STACKS

OSDAP, ASSEMBLY INSTRUCTIONS MANUAL
PART NUMBER 8974601

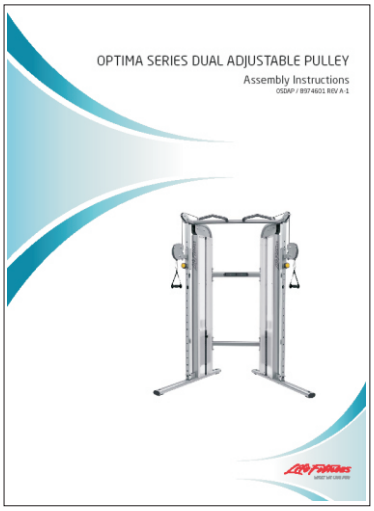

OPTIMA OWNERS MANUAL
PART NUMBER 8972101

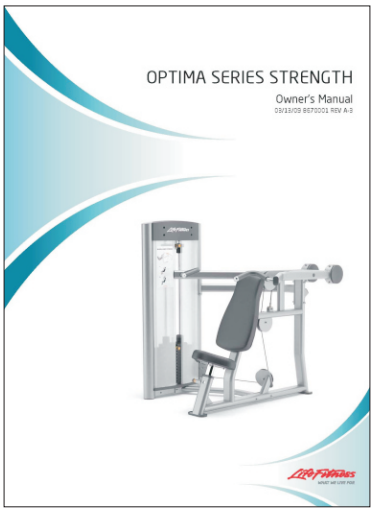

OSDAP DUAL ADJUSTABLE PULLEY ACCESSORIES

SUPPLIED ACCESSORIES

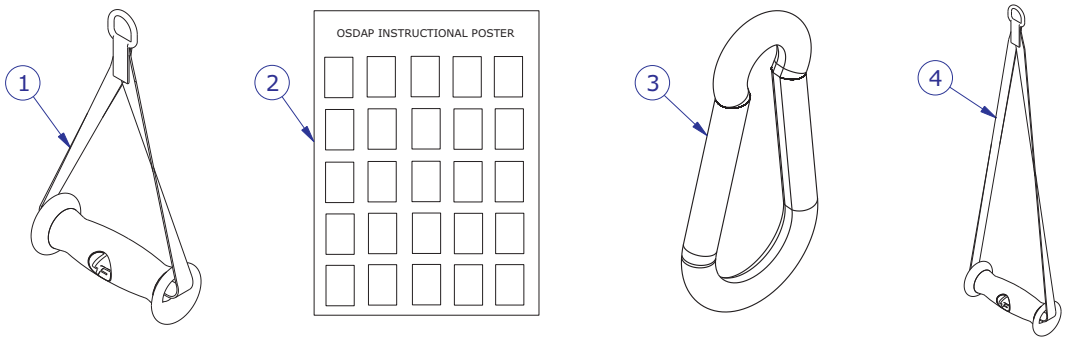

ITEM NO.	QTY.	PART NO.	DESCRIPTION
1	2	8219601	HANDLE, CM/MJ, SHORT STRAP
2	1	8695001	POSTER, OSDAP INSTRUCTIONAL
3	2	3250201	SNAP LINK, 3/8" DIA
4	2	8219701	HANDLE, CM/MJ, LONG STRAP

OPTIONAL ACCESSORIES

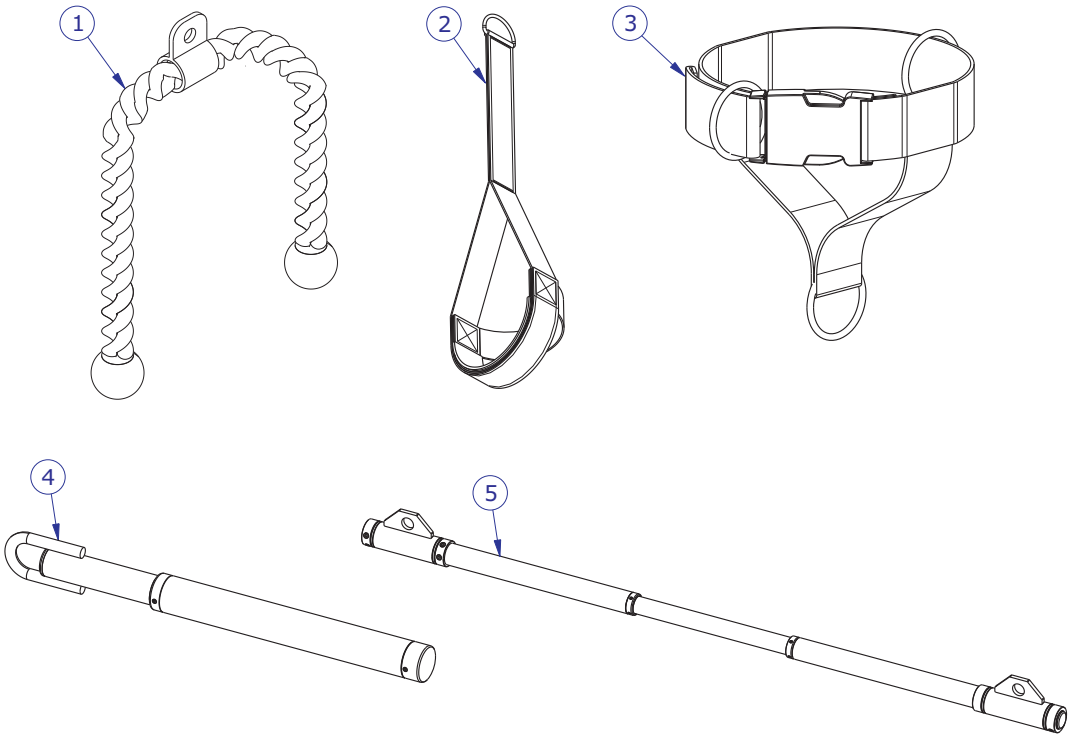

ITEM NO.	QTY.	PART NO.	DESCRIPTION
1	1	6851501	ROPE, TRICEP
2	1	7753001	LE/LC STRAP
3	1	7734701	STRAP, 4-WAY ANKLE
4	1	7753201	ASSY, SPORT BAR
5	1	7753101	ASSY, LONG BAR

OSDAP DUAL ADJUSTABLE PULLEY IMAGE

