Signature Series Multi-Jungle MJAXO Adjustable Crossover

SERIAL NUMBER: MJ40908016 & UP
MJ80908007 & UP
MJ12S0908002 & UP
MJ12V0908001 & UP

CUSTOMER SUPPORT SERVICES

Parts List

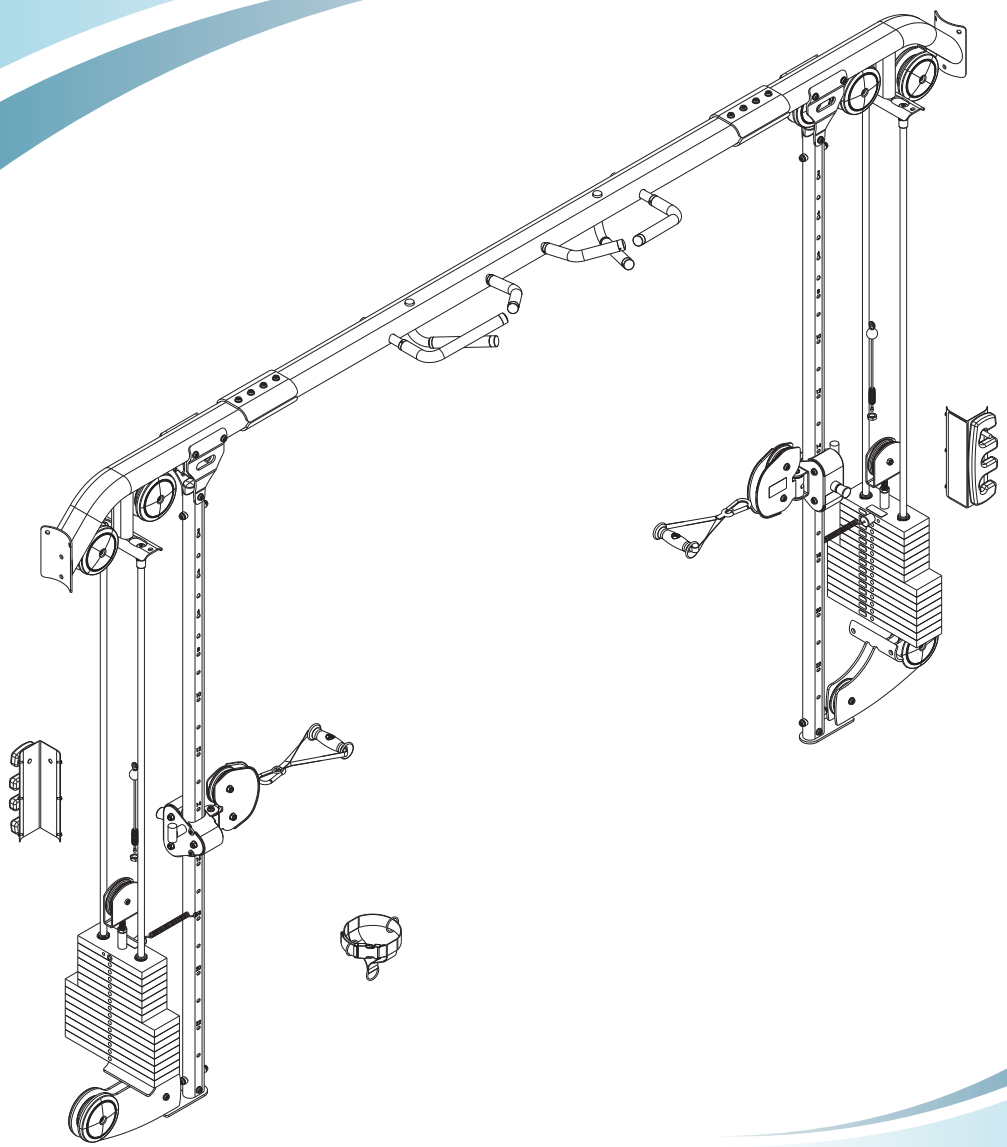

LifeFitness
WHAT WE LIVE FOR

MJAXO ADJUSTABLE CROSSOVER
CONTENTS

	PAGE
CORE ASSEMBLY	3
COMPONENTS ASSEMBLY	4
COMPONENTS ASSEMBLY LEGEND	5
COMPONENTS ASSEMBLY II	6
COMPONENTS ASSEMBLY II LEGEND	7
MJ-X BEAM ASSEMBLY	8
MJACO/AXO, BOOM ASSEMBLY	9
MJAP, BASE SPRT. ASSEMBLY	10
CM/MJ, ADJ PULLEY CARRIAGE ASSEMBLY	11
CM/MJ, ADJ PULLEY COLUMN	12
190LB. WEIGHT STACK ASSEMBLY	13
CABLE ROUTING	14

MJAXO ADJUSTABLE CROSSOVER
MJCORE ASSEMBLY

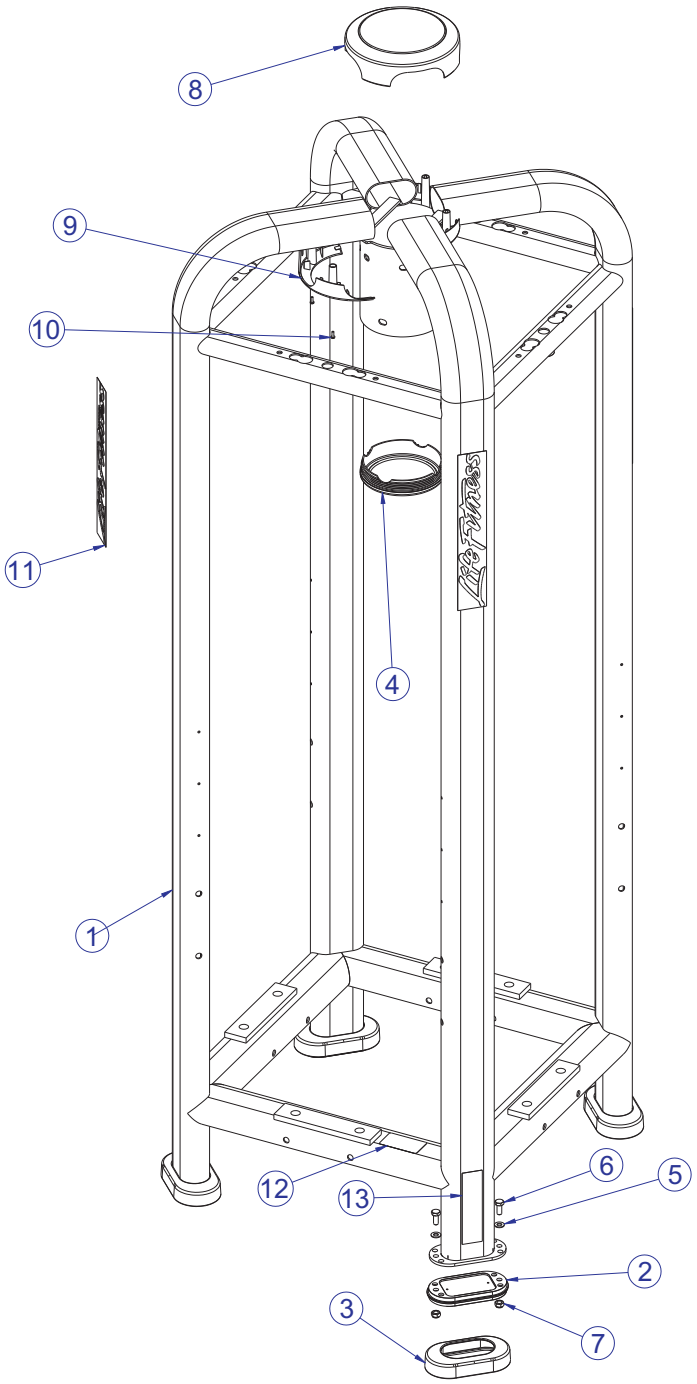

ITEM NO.	QTY.	PART NO.	DESCRIPTION
1	1	7628601	WLDMT, MJCORE
2	4	7334001	FOOT, 2.50 X 4.49 FLOV
3	4	7340201	COVER, FOOT - STRAIGHT
4	1	7640401	COVER, BOTTOM CAP
5	28	3236601	WASHER, 3/8 SAE SS
6	8	3251202	SCREW, M10 X1.5 X 25MM HEX CS ST ZN

7	28	3236801	NUT, M10 HEX NYLOCK SS
8	1	7629201	COVER, CENTER TOP
9	2	7629801	COVER, CENTER BOTTOM
10	4	3236501	M4 X 0.7 PHL PAN MS ST ZN
11	4	7348001	LABEL, LIFE FITNESS LOGO
12	1	7571301	LABEL, SERIAL NUMBER
13	1	8220001	LABEL, 2" ASTM WARN

MJAXO ADJUSTABLE CROSSOVER COMPONENT ASSEMBLY

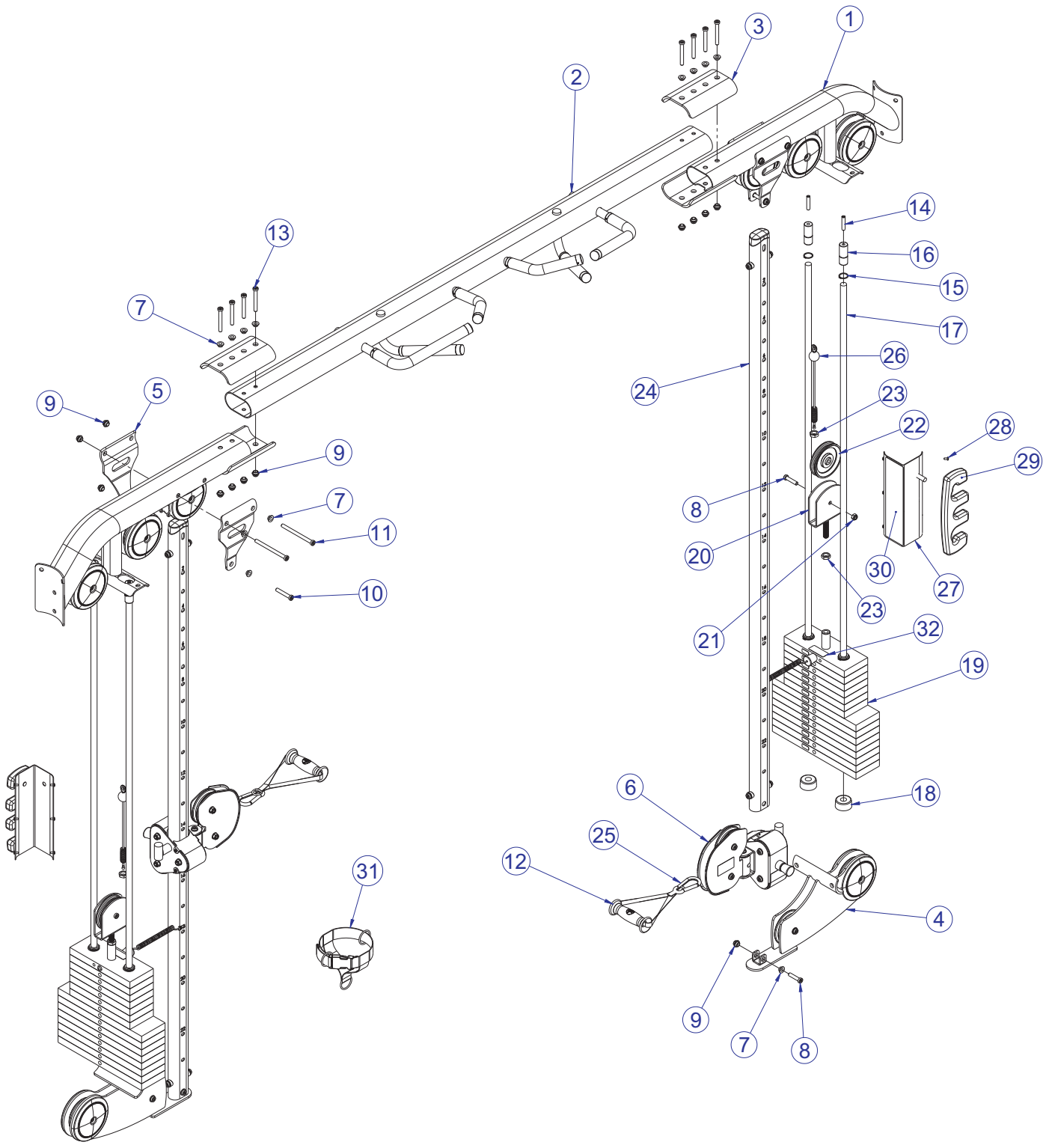

SEE PAGE 5 FOR LEGEND

MJAXO ADJUSTABLE CROSSOVER COMPONENT ASSEMBLY LEGEND

ITEM NO.	QTY.	PART NO.	DESCRIPTION
1	2	7641801	ASSY, MJACO/AXO BOOM
2	1	7640601	ASSY, MJ X-BEAM
3	2	7633201	BRKT, MJ LRG OVAL
4	2	7645101	ASSY, MJAP, BASE SPRT
5	4	7780301	BRKT, MJAP, ADJ TUBE TOP
6	2	8328601	ASSY, CM/MJ, ADJ PULLEY CARRIAGE
7	16	7630101	RETAINER, CM/MJ, PULLEY
8	4	3236206	SCREW, M10 X1.5 45MM
9	16	7335401	NUT, M10 X 1.5 SOCKET HEAD
10	2	3236209	SCREW, M10 X1.5 60MM
11	4	3236220	SCREW, M10 X1.5 130MM
12	2	8219601	HANDLE, CM/MJ, SHORT STRAP
13	8	3236213	SCREW, M10 X1.5 80MM
14	4	3240502	M10 X 1.5 X 50 HXS NO CUP ST BO
15	4	3232421	RING, BRE .940, 5100-100 ST PP B
16	4	7634401	RETAINER, CM/MJ, GUIDEROD
17	4	7328618	GUIDE ROD, .75 OD SOLID 71.50
18	4	7352101	CUSHION, WEIGHT STACK
19	2	7647501	ASSY, 190LB STACK
20	2	7642201	WLDMNT, CM/MJ STK PULLEY
21	2	3236801	NUT, M10 HEX NYLOCK SS
22	2	3237801	PULLEY, 4.5" OD
23	4	3236902	NUT, M16 X 2 HEX JAM SS
24	2	7708401	ASSY, CM/MJ, ADJ PLLY COLUMN
25	2	3250201	SNAP LINK, 3/8" DIA
26	2	7645701	CABLE, MJAP/AXO
27	2	[redacted]	WLDMT, CM/MJ, PLACARD BRKT
28	12	3239101	SCREW, M5X10 PHL PAN TT ST
29	2	7711501	WEIGHT, 5 LB. ADD-ON
30	2	7734601	LABEL, PLACARD CM/MJ, ADJ CROSSOVER
31	1	7734701	STRAP, 4-WAY ANKLE
32	2	7744501	LABEL, WEIGHT AT HANDLE

MJAXO ADJUSTABLE CROSSOVER COMPONENT ASSEMBLY II

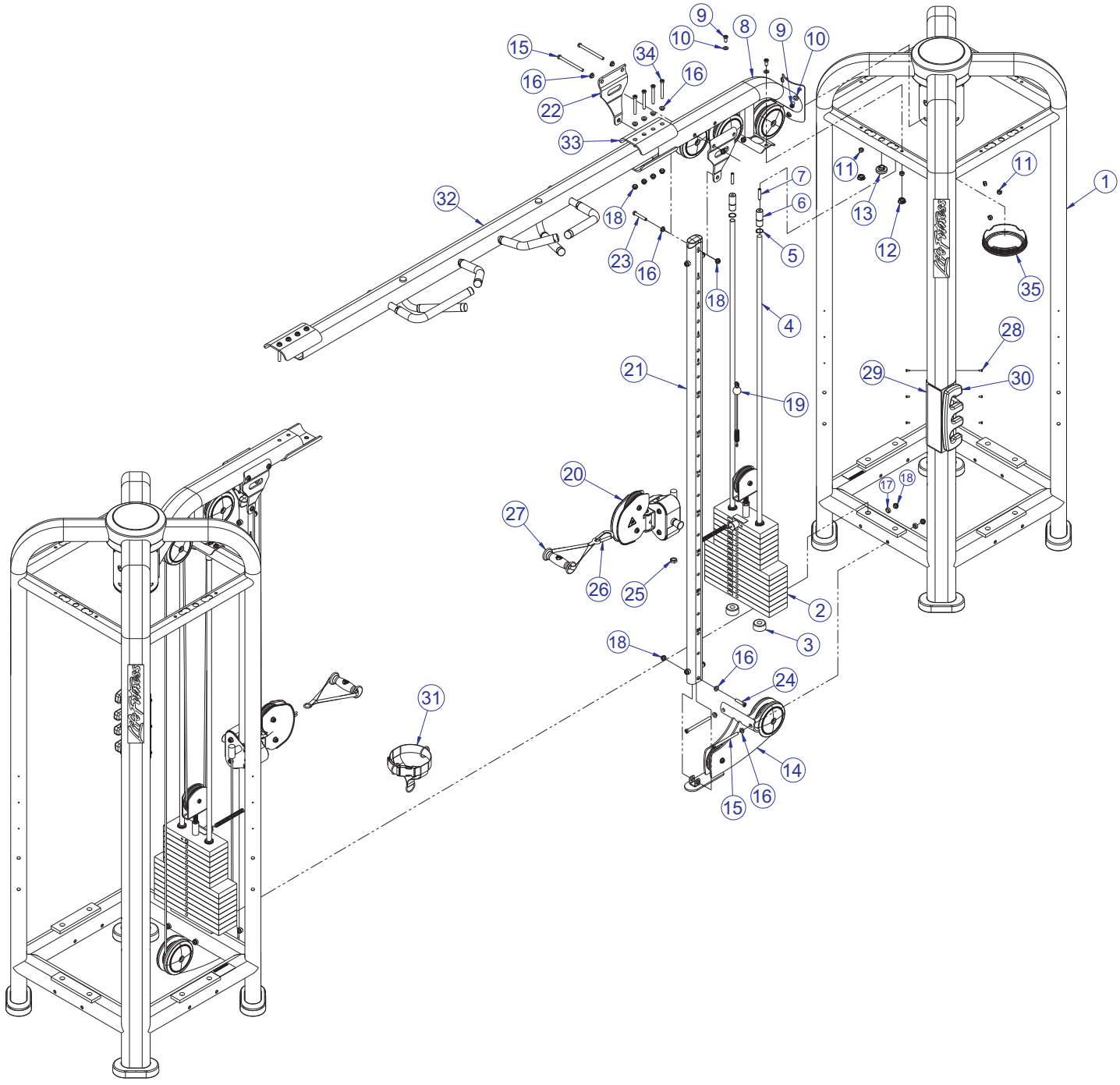

SEE PAGE 7 FOR LEGEND

MJAXO ADJUSTABLE CROSSOVER COMPONENT ASSEMBLY II LEGEND

ITEM NO.	QTY.	PART NO.	DESCRIPTION
1	2	MJCORE-ASSY	ASSY, COMPONENTS MJCORE
2	2	7647501	ASSY, 190LB STACK
3	4	7352101	CUSHION, WEIGHT STACK
4	4	7328618	GUIDE ROD, .75 OD SOLID 71.63
5	4	3232421	RING, BRE .940, 5100-100 ST PP B
6	4	7634401	RETAINER, CM/MJ, GUIDEROD
7	4	3240502	M10 X 1.5 X 50 HXS NO CUP ST BO
8	2	7641801	ASSY, MJACO/AXO BOOM
9	10	3236202	SCREW, M10 X1.5 25MM
10	10	3236601	WASHER, 3/8 SAE SS
11	10	3236801	NUT, M10 HEX NYLOCK SS
12	4	3237403	PLUG, 1" HOLE
13	2	7642301	BUMPER, CM/MJ, PLUG
14	2	7645101	ASSY, MJAP, BASE SPRT
15	8	3236220	SCREW, M10 X1.5 130MM
16	20	7630101	RETAINER, CM/MJ, PULLEY
17	4	7634701	SPACER, CM/MJ, .565 X .815
18	20	7335401	NUT, M10 X 1.5 SOCKET HEAD
19	2	7645701	CABLE, MJAP/AXO
20	2	7645201	ASSY, CM/MJ, ADJ PLLY CARRIAGE
21	2	7708401	ASSY, CM/MJ, ADJ PLLY COLUMN
22	4	7780301	BRKT, MJAP, ADJ TUBE TOP
23	2	3236209	SCREW, M10 X1.5 60MM
24	2	3236206	SCREW, M10 X1.5 45MM
25	2	3236902	NUT, M16 X 2 HEX JAM SS
26	2	3250201	SNAP LINK, 3/8" DIA
27	2	7647801	HANDLE, CM/MJ, SHORT STRAP
28	12	3239101	SCREW, M5X10 PHL PAN TT ST
29	2	[redacted]	PLACARD BRACKET
30	2	7711501	WEIGHT, 5 LB. ADD-ON
31	2	7734701	STRAP, 4-WAY ANKLE
32	1	7640601	ASSY, MJ X-BEAM
33	2	7633201	BRKT, MJ LRG OVAL
34	8	3236213	SCREW, M10 X 1.5 80MM
35	2	7640401	COVER, BOTTOM CAP

MJAXO ADJUSTABLE CROSSOVER
MJ X-BEAM ASSEMBLY - 7640601

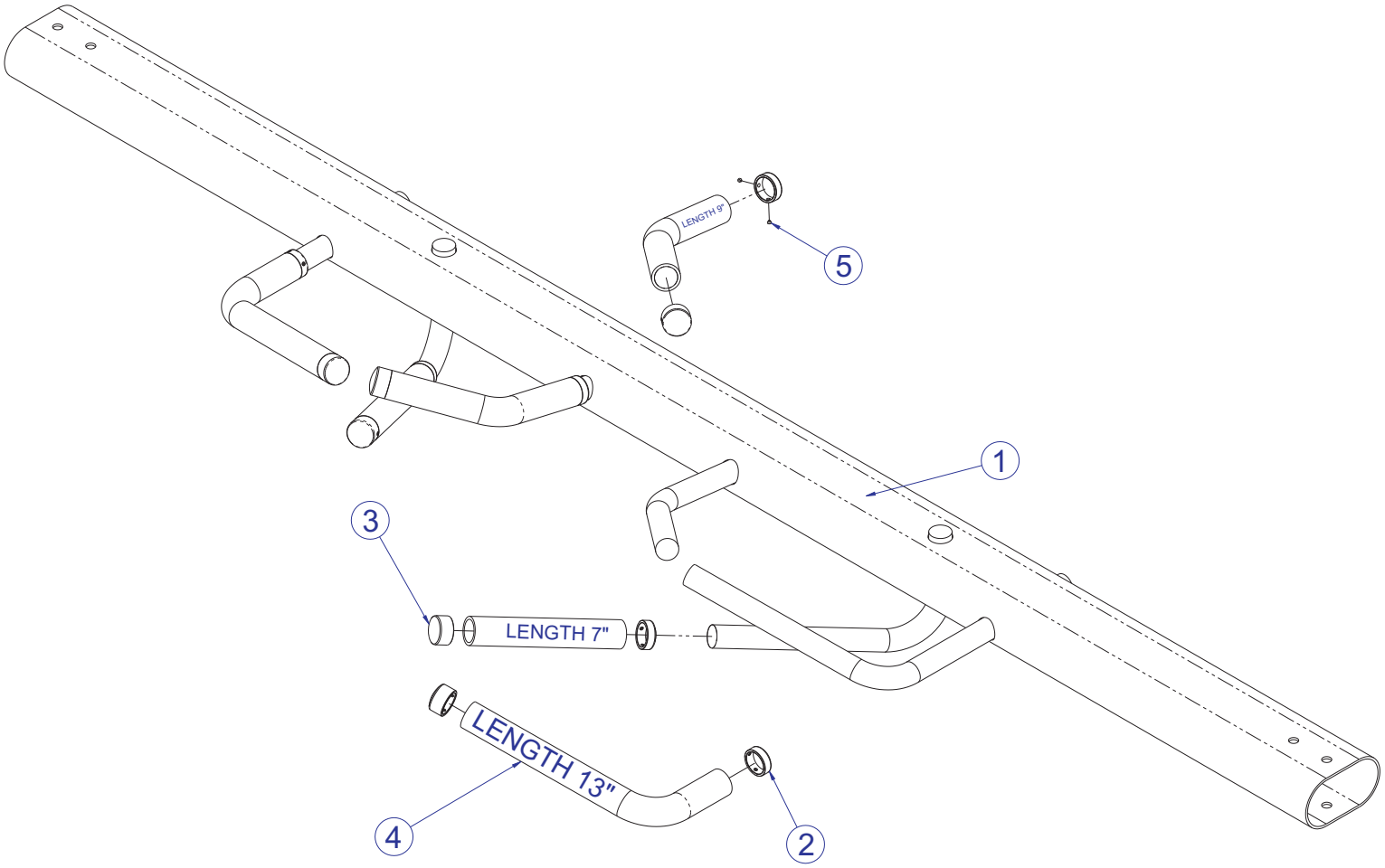

ITEM NO.	QTY.	PART NO.	DESCRIPTION
1	1	7632701	WLDMT, MJ X-BEAM
2	6	7662801	RING, GRIP 1.25 OD
3	6	7662901	CAP, GRIP 1.25 OD
4	6	3235801	GRIP, SHADOW GREY OPEN END
5	24	3247701	M4 X .7 HXS NO CUP ST BO

MJAXO ADJUSTABLE CROSSOVER
MJACO/AXO BOOM ASSEMBLY - 7641801

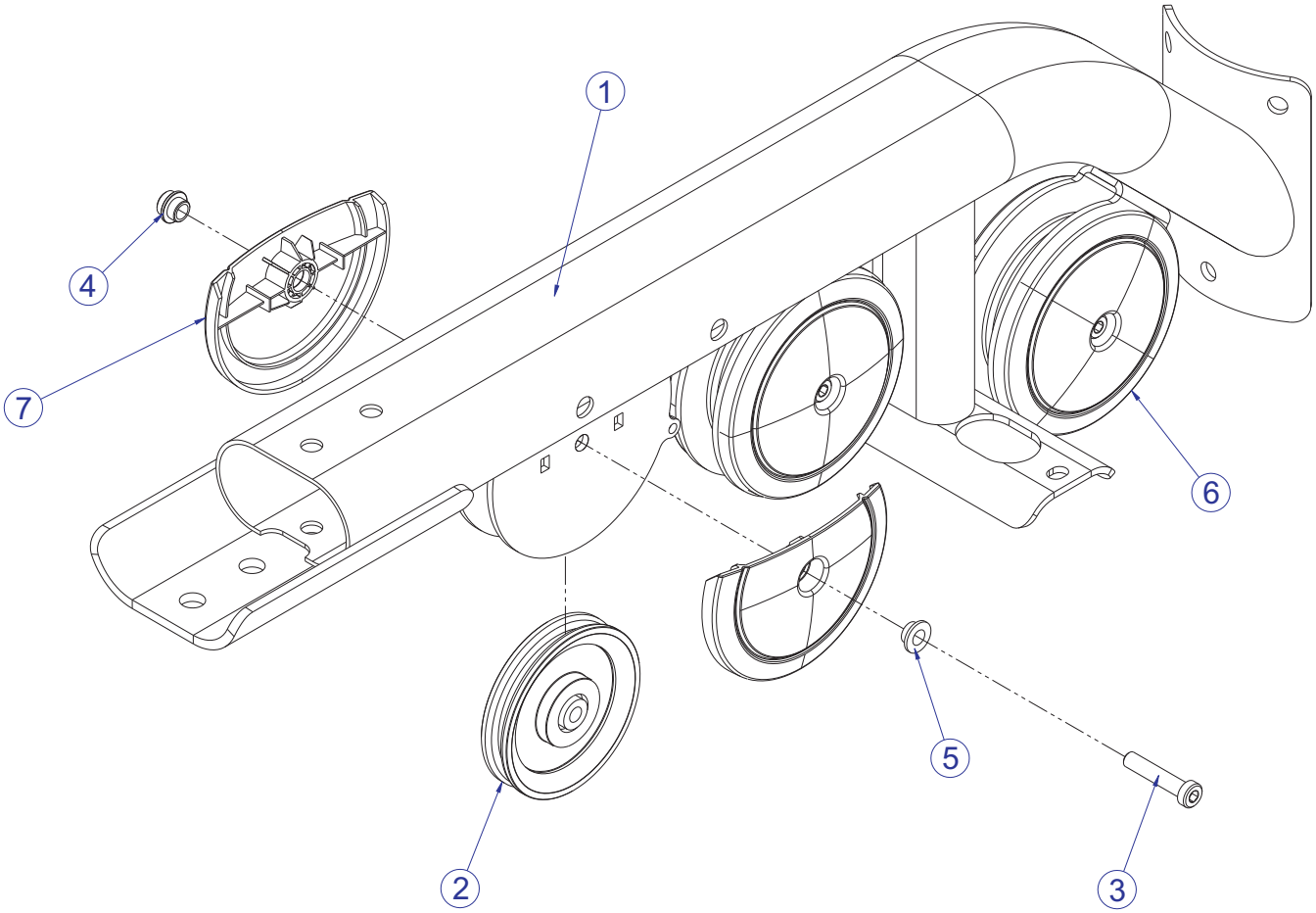

ITEM NO.	QTY.	PART NO.	DESCRIPTION
1	1	7638301	WLDMNT, MJACO/AXO BOOM
2	3	3237801	PULLEY, 4.5" OD
3	3	3236207	SCREW, M10 X1.5 50MM
4	3	7335401	NUT, M10 X 1.5 SOCKET HEAD
5	3	7630101	RETAINER, CM/MJ, PULLEY
6	4	7629901	COVER, PULLEY- BOLTED FULL
7	2	7630001	COVER, PULLEY BOLTED PARTIAL

MJAXO ADJUSTABLE CROSSOVER
MJAP BASE SUPPORT ASSEMBLY - 7645101

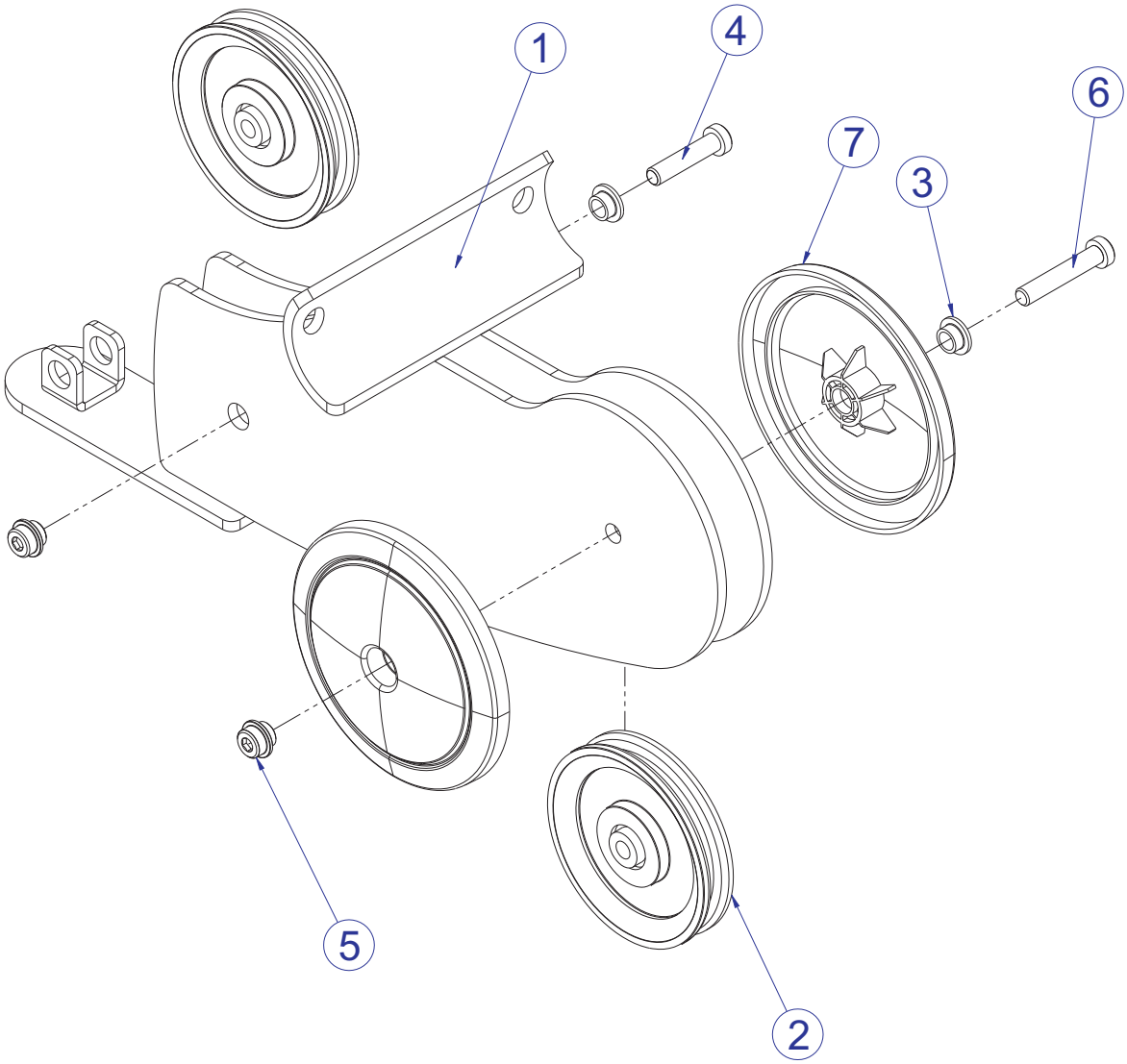

ITEM NO.	QTY.	PART NO.	DESCRIPTION
1	1	7634801	WLDMT, MJ ADJ PULLEY BASE
2	2	3237801	PULLEY, 4.5" OD
3	2	7630101	RETAINER, CM/MJ, PULLEY
4	1	3236206	SCREW, M10 X1.5 45MM
5	2	7335401	NUT, M10 X 1.5 SOCKET HEAD
6	1	3236208	SCREW, M10 X1.5 55MM
7	2	7629901	COVER, PULLEY- BOLTED FULL

MJAXO ADJUSTABLE CROSSOVER
CM/MJ ADJ PULLEY CARRIAGE ASSEMBLY - 8328601

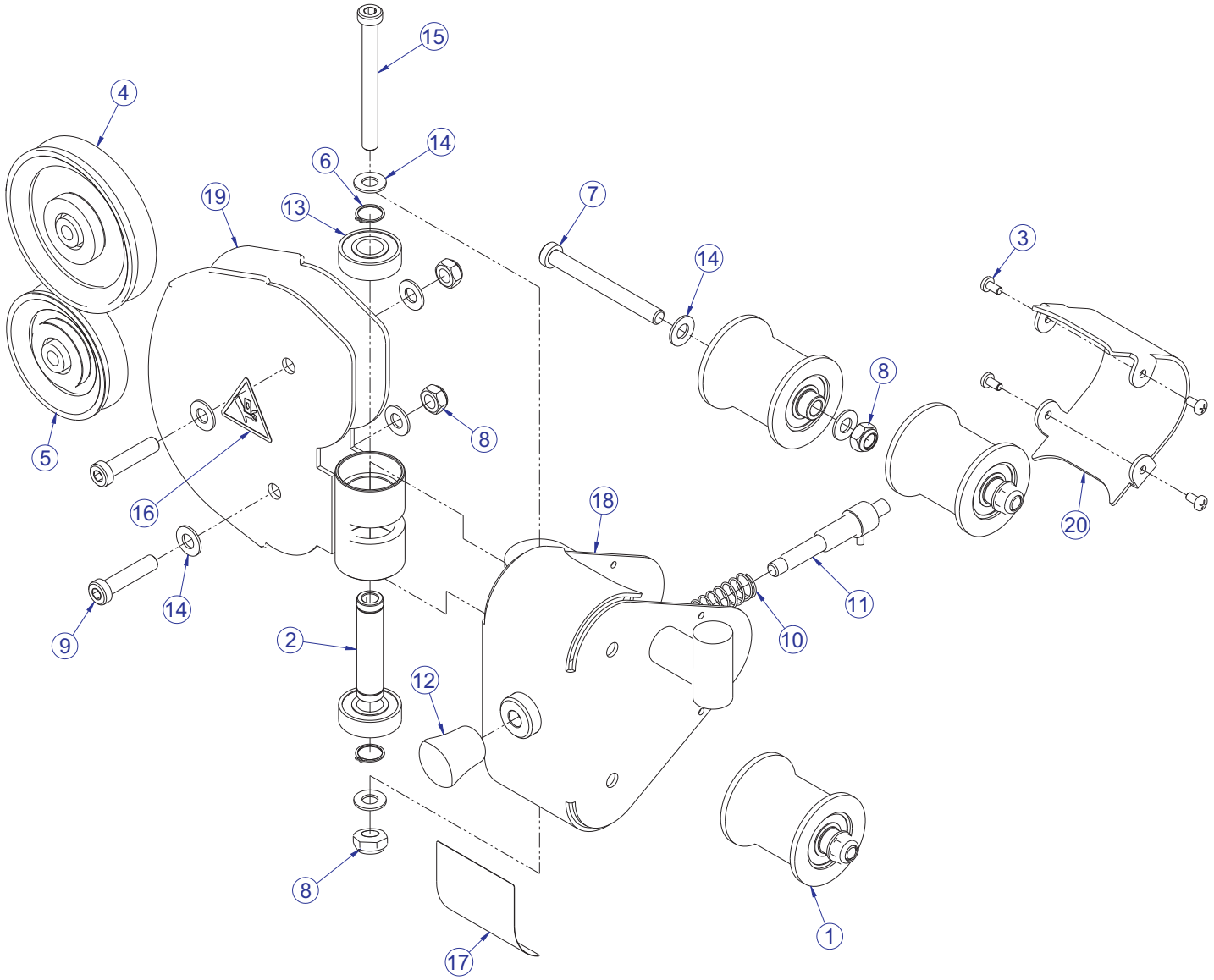

ITEM NO.	QTY.	PART NO.	DESCRIPTION
1	3	7637901	ASSY, ROLLER-CONCAVE
2	1	7645401	SHAFT, CM/MJ, 6203 BRNG
3	4	3239101	SCREW, M5X10 PHL PAN TT ST
4	1	3237801	PULLEY, 4.5" OD
5	1	3245701	PULLEY, 3.5" OD, 10MM ID SG
6	2	3232413	RING, BRE .631, 5100-66, ST PP B
7	3	3236216	SCREW, M10 X1.5 95MM
8	6	3236801	NUT, M10 HEX NYLOCK SS
9	2	3236206	SCREW, M10 X1.5 45MM
10	1	7351501	SPRING, PULL PIN LARGE

ITEM NO.	QTY.	PART NO.	DESCRIPTION
11	1	8327901	ASSY, CM/MJ PULL PIN, BEVEL NOSE
12	1	7351401	KNOB, TULIP STYLE
13	2	3245901	BEARING, 6203
14	12	3236601	WASHER, 3/8 SAE SS
15	1	3236217	SCREW, M10 X1.5 100MM
16	1	8039501	LABEL, WARNING,TRIANGLE
17	1	7821001	LABEL, WARNING ADJ. CARRIAGE
18	1	8327601	WLDMT, MJ ADJ PULLEY CARRIAGE
19	1	7633301	WLDMT, CM/MJ, SWIVEL PULLEY
20	1	8331801	BRKT, CM/MJ, CARRIAGE SHROUD

MJAXO ADJUSTABLE CROSSOVER
CM/MJ ADJ PULLEY COLUMN ASSEMBLY - 7708401

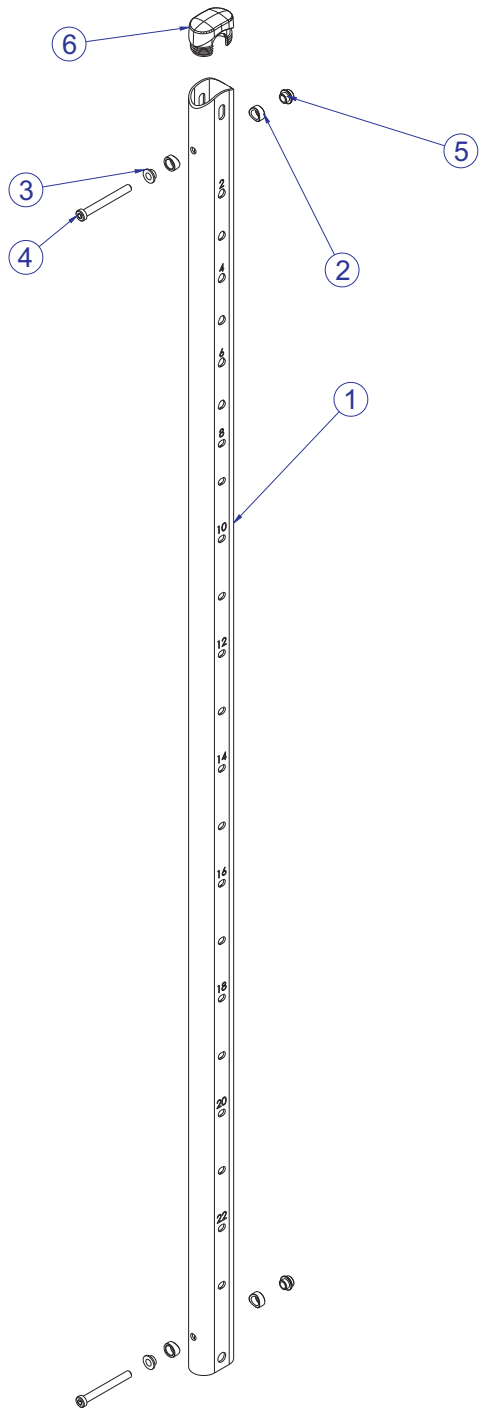

ITEM NO.	QTY.	PART NO.	DESCRIPTION
1	1	8264101	TUBE, CM/MJ ADJ COLUMN
2	4	7645501	SPACER, CM/MJ, SM FLOV CONCAVE
3	2	7630101	RETAINER, CM/MJ, PULLEY
4	2	3236215	SCREW, M10 X1.5 90MM
5	2	7335401	NUT, M10 X 1.5 SOCKET HEAD
6	1	7333801	CAP, SMALL FLOV- END

MJAXO ADJUSTABLE CROSSOVER
190LB. WEIGHT STACK ASSEMBLY - 7647501

QTY.	PART NO.	DESTCRIPTION
2	8068901	LABEL, WEIGHT STACK 95LBS
2	8069101	LABEL, WEIGHT STACK 45.5KG

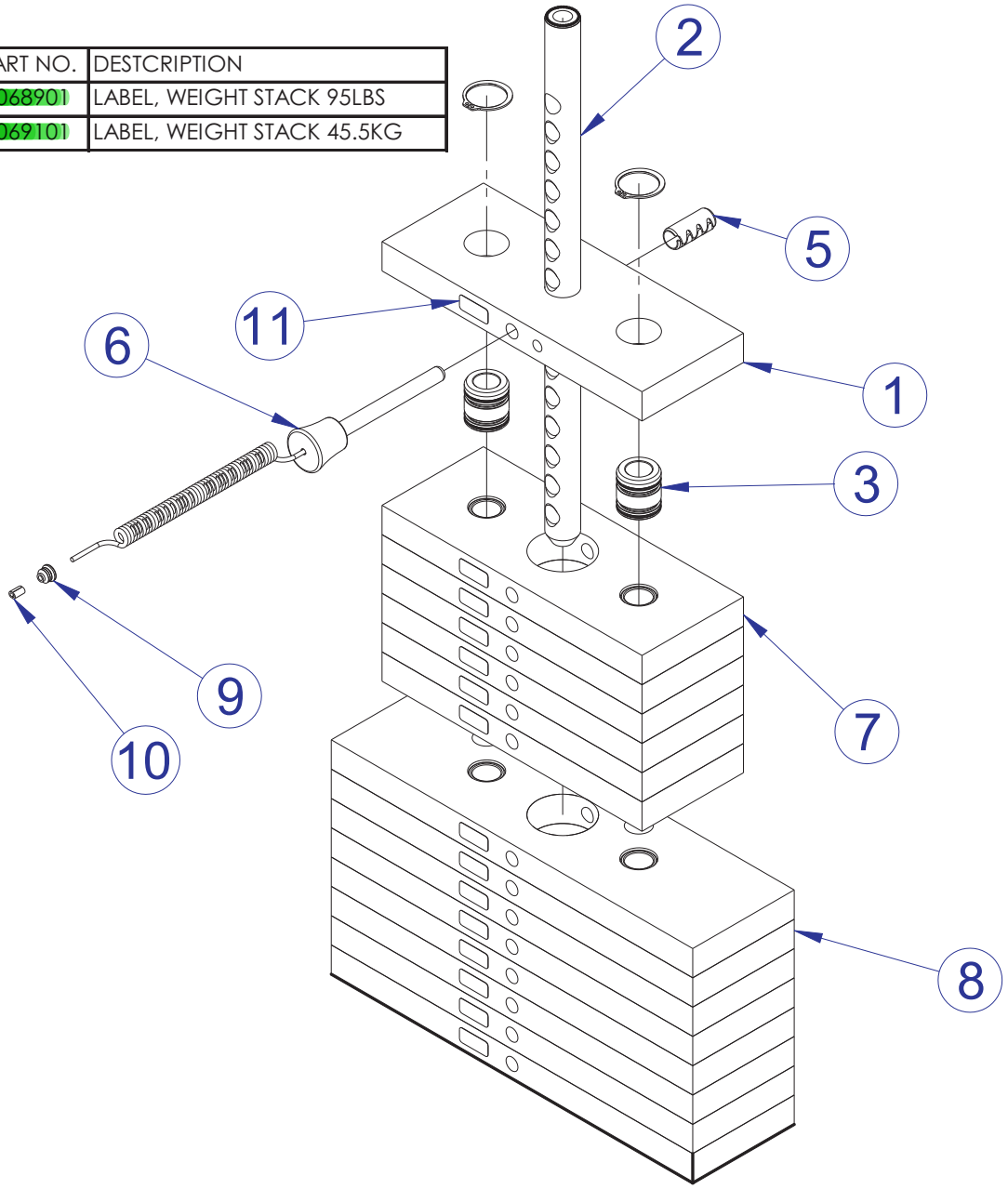

ITEM NO.	QTY.	PART NO.	DESCRIPTION
1	1	7353901	HEADPLATE, WT. STACK
2	1	7352600	BAYONET, 14 PLATE
3	2	7338001	BUSHING, HEADPLATE
5	1	3236001	BUSHING, SPRING PIN
6	1	7353001	ASSY, SELECTOR PIN
7	6	7353701	ASSY, 10 LB PLATE
8	8	7353801	ASSY, 15 LB PLATE
9	1	7356501	PLUG, LANYARD ATTACHMENT
10	1	7523601	CRIMP, CABLE

MJAXO ADJUSTABLE CROSSOVER
MJAXO CABLE ROUTING GUIDE (cross-section)

