LC-8500HR(BELT) EXERCISE BIKE

GE09-00032-XXXX

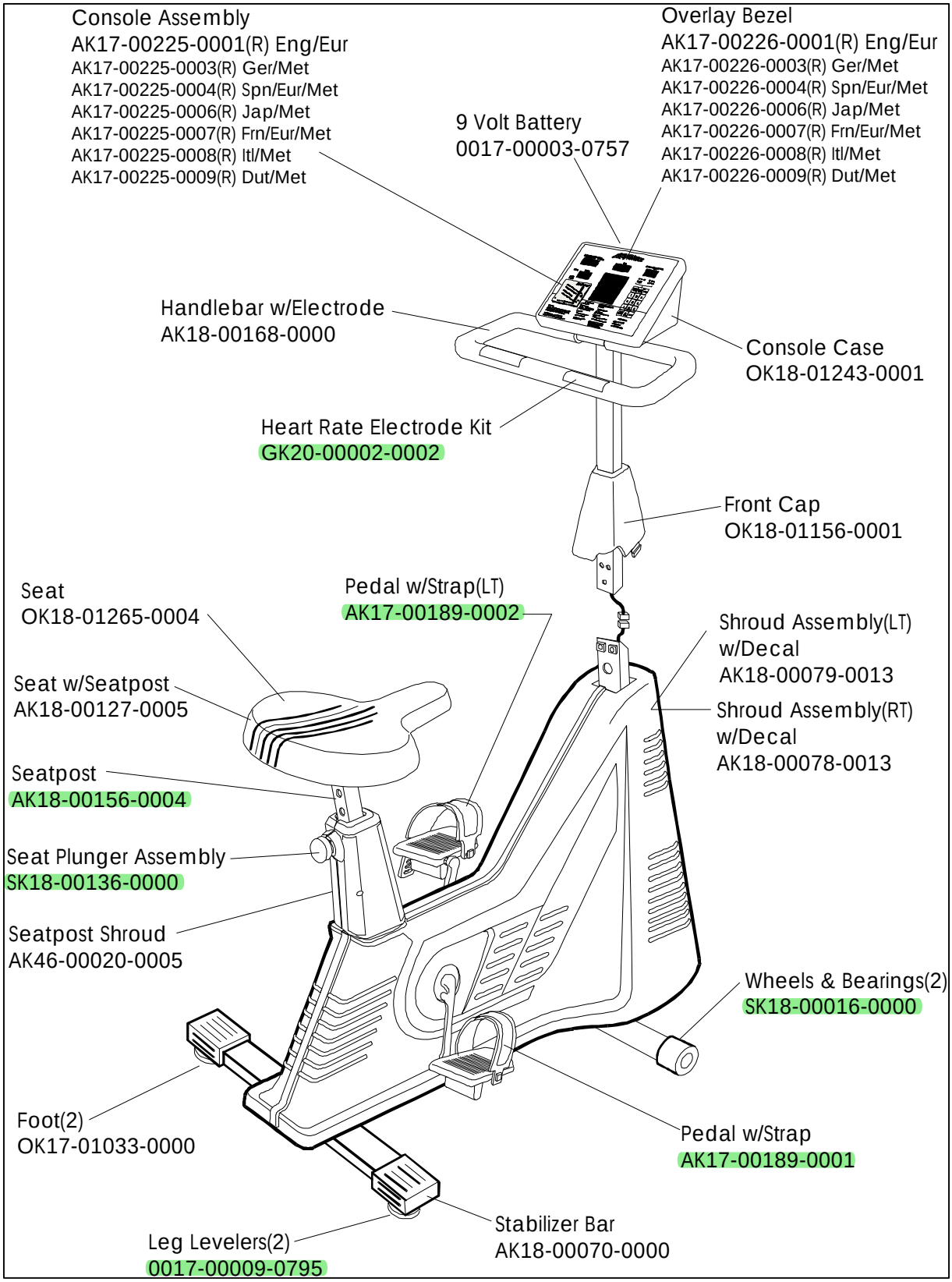

Revision Date: 10/27/98

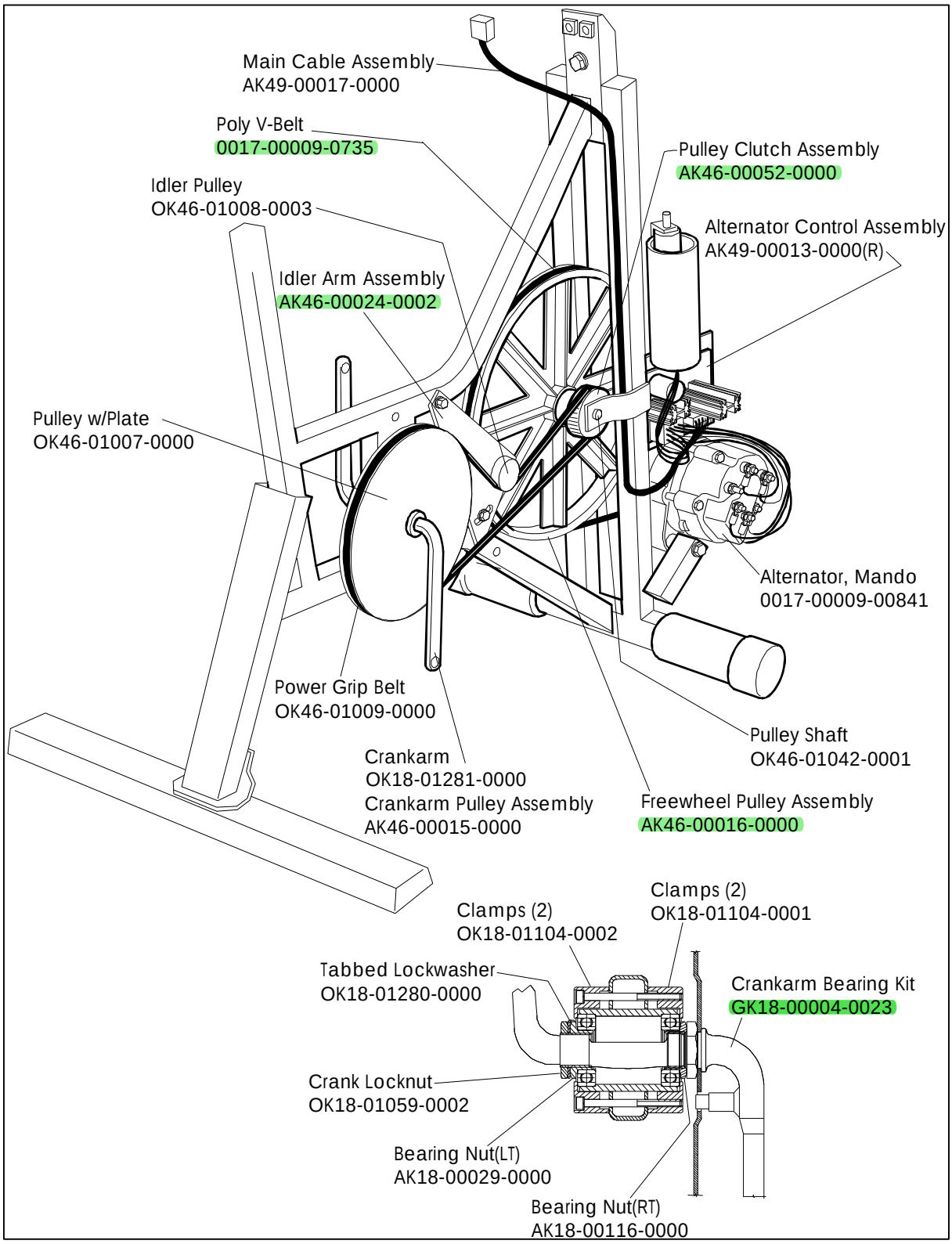
Main Cable Assembly
AK49-00017-0000
Poly V-Belt
0017-00009-0735
Idler Pulley
OK46-01008-0003
Idler Arm Assembly
AK46-00024-0002
Pulley Clutch Assembly
AK46-00052-0000
Alternator Control Assembly
AK49-00013-0000(R)
Pulley w/Plate
OK46-01007-0000
Alternator, Mando
0017-00009-00841
Power Grip Belt
OK46-01009-0000
Pulley Shaft
OK46-01042-0001
Crankarm
OK18-01281-0000
Crankarm Pulley Assembly
AK46-00015-0000
Freewheel Pulley Assembly
AK46-00016-0000
Clamps (2)
OK18-01104-0001
Clamps (2)
OK18-01104-0002
Tabbed Lockwasher
OK18-01280-0000
Crankarm Bearing Kit
GK18-00004-0023
Crank Locknut
OK18-01059-0002
Bearing Nut(LT)
AK18-00029-0000
Bearing Nut(RT)
AK18-00116-0000