750T Elevation Motor Cam Kit

Kit Number KAX-22890 Installation Instructions

NOTE: *This instruction sheet describes how to replace the elevation motor cam for treadmill model 750T.*

Tools Required

- Side cutters
- #2 Phillips screwdriver
- 9/16” Open end wrench
- 9/16” Socket wrench
- Tape Measure

1. **Read and understand all instructions thoroughly before installing this kit.**

2. **Verify the kit contents shown in Figure 1.**

   A. Kit, Preset Cam Assembly, With Screw (1), KAX-22891
   B. Wire Tie, 9” (2), EH-00986

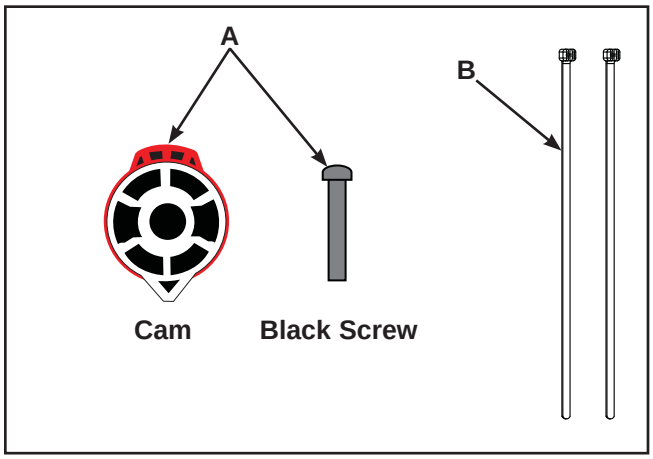

Figure 1

WARNING: ***Disconnect the power cord before beginning this procedure. Keep wet items away from inside parts of the treadmill. Electrical shock could occur even if the treadmill is unplugged. Do not touch components near the motor controller. A charge can remain after unplugging the power cord and turning off the treadmill.***

3. **Disconnect external power source.**

   A. Turn the main power switch on the front to the off (O) position.

   B. Unplug the treadmill from the power outlet.

4. **Remove the elevation motor.**

CAUTION: Always use proper lifting methods when moving heavy items.

   A. With two people, carefully tip the treadmill onto the side.

   B. Using the side cutters, cut the two wire ties, securing the elevation cable to the elevation cable support brace. See Figure 2.

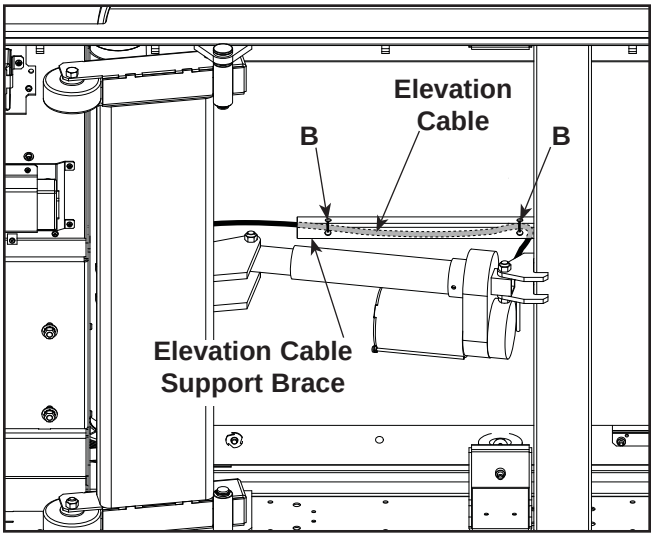

Figure 2

   C. Using a 9/16” open end wrench and a 9/16” Socket wrench, remove the two bolts, nuts and sleeves on the elevation motor (one at the top and one at the bottom). See Figure 3. ***NOTE:*** *Hold the motor while you remove the second bolt so that it doesn’t fall.*

CYBEX®

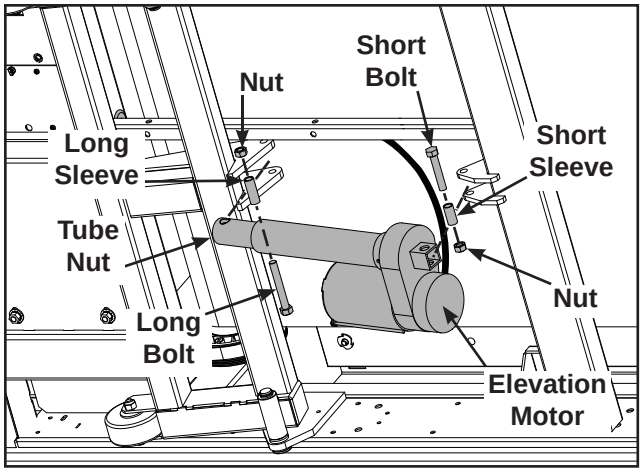

Figure 3

D. Carefully lift and remove the elevation motor from the treadmill. ***NOTE:*** *The elevation motor is still connected to the motor controller. Do not damage the elevation cable.*

5. Remove cover from elevation motor.

A. Using a #2 Phillips screwdriver, remove the screw securing the elevation motor cover. See Figure 4.

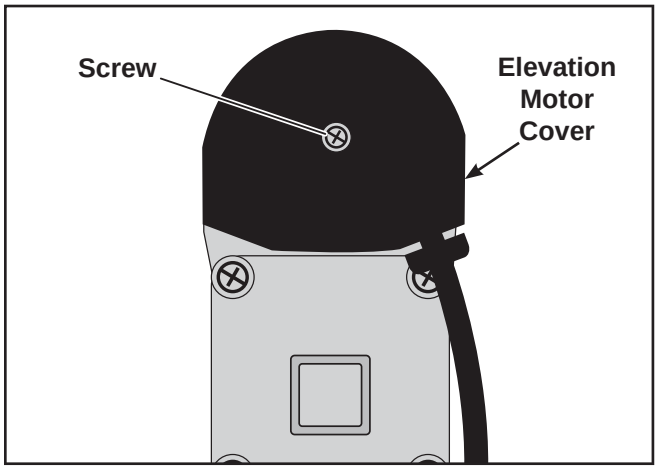

Figure 4

B. Lift off elevation motor cover for access to cam assembly.

6. Remove cam.

A. Using a #2 Phillips screwdriver, remove the silver screw securing the cam to the elevation motor. See Figure 5.

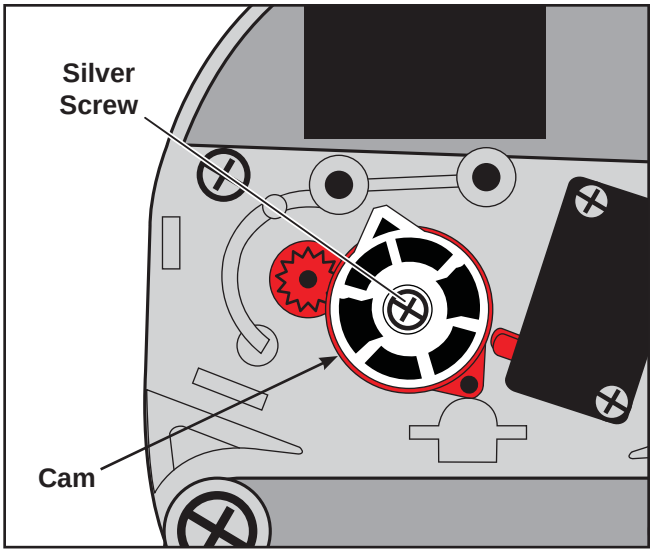

Figure 5

B. Remove the bushing from the cam and set aside. See Figure 6.

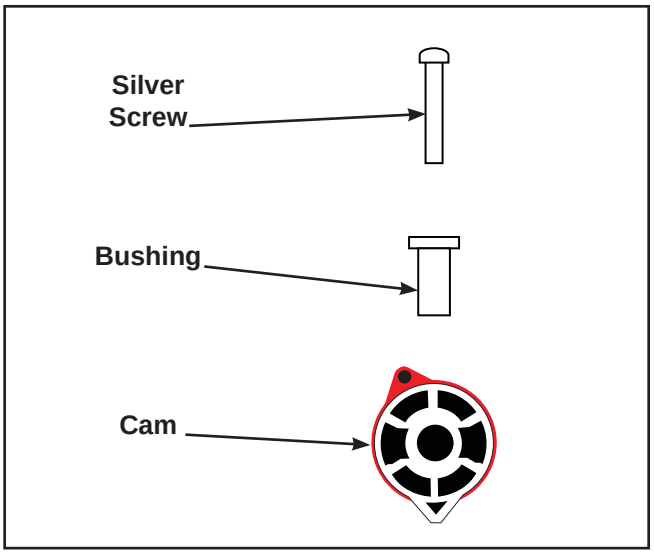

Figure 6

C. Discard the cam and silver screw.

7. Install cam.

A. Locate the cam and black screw from the kit. See Figure 1.

B. Assemble the cam by placing the black screw and bushing (from step 6B) into the cam. See Figure 7. ***NOTE:*** *The new cam has a larger red tab. Compare the cam shapes in Figures 6 and 7.*

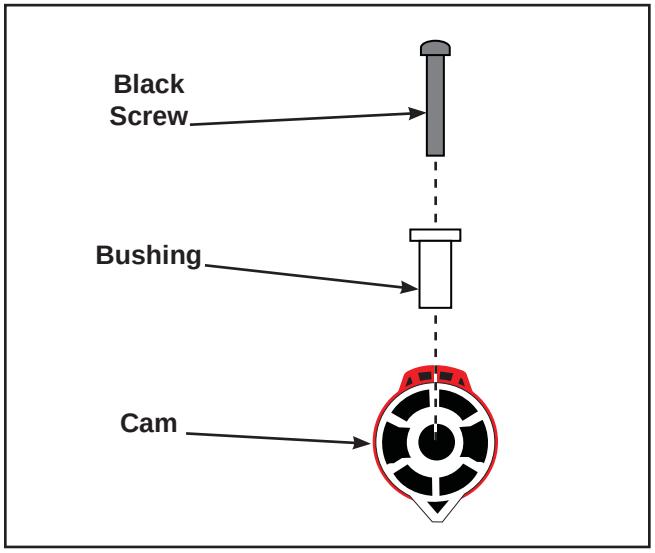

Figure 7

C. Place the cam assembly from step 7B onto the elevation motor as shown in Figure 8. ***NOTE:*** *Position the large tab next to the switch.*

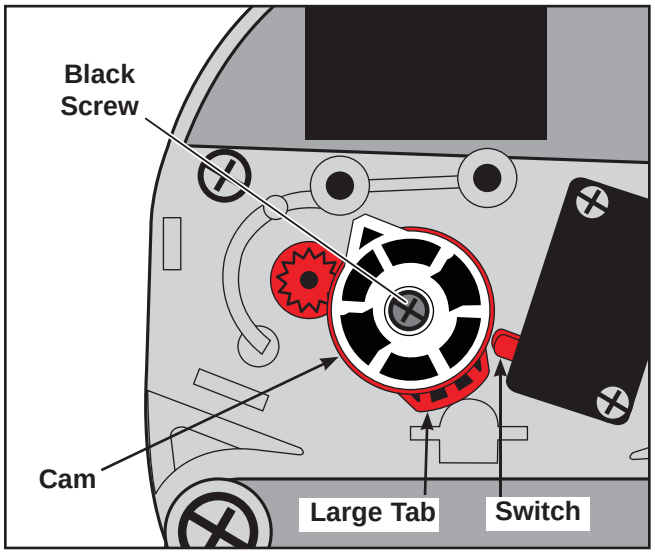

Figure 8

NOTE: *Overtightening the black screw will cause the cam to bind.*

D. Using a #2 Phillips screwdriver, slowly tighten the black screw.

E. While the black screw is being tightened, rock the cam back and forth to feel for play.

F. When the black screw is tightened properly, there will be a very small amount of play. If there is not, slowly loosen the black screw.

8. Calibrate the elevation.

A. Connect the main power cord into the power outlet.

NOTE: *The elevation motor will now rotate to find the zero percent position. Ensure that the cam is moving and the bushing is not. If the bushing turns, the black screw needs to be tightened.*

B. Wait for the elevation motor to stop turning.

C. Unplug the treadmill from the power outlet.

D. Turn the tube nut with your fingers until it measures 13.5” (34.3 cm) from the center of the top hole to the center of the bottom hole. See Figure 9.

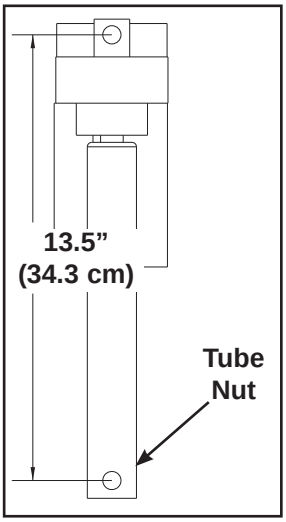

Figure 9

E. Turn the tube nut one full rotation counter clockwise to add additional spacing.

9. Install elevation motor cover.

A. Using a Phillips screwdriver, secure the elevation motor cover with the screw removed in step 5A. See Figure 4.

10. Secure the elevation motor.

A. Carefully place the elevation motor in position on the treadmill. See Figure 3.

B. Slide both bolts and sleeves into the slots and attach the nuts as shown in Figure 3.

C. Using a 9/16” open end wrench and a 9/16” Socket wrench, securely tighten the nuts and two bolts.

D. Route the elevation motor cable along the frame and though the grommet. See Figure 3.

E. Tie the elevation cable with wire ties (B) to the frame. See Figure 3.

F. Using the side cutters, remove excess material from wire ties (B).

11. Test the unit for proper operation.

CAUTION: Always use proper lifting methods when moving heavy items.

A. Connect the main power cord into the power outlet.

B. Carefully lower the treadmill to the floor.

C. Operate the unit at all levels to verify proper operation.

Cybex® and the Cybex logo are registered trademarks of Cybex International, Inc.
10 Trotter Drive Medway, MA 02053 • 508-533-4300 • FAX 508-533-5183 • www.cybexinternational.com • techhelp@cybexintl.com
Copyright © 2010, Cybex International, Inc. All rights reserved • LT-22889-4 A • May 2010